Precision Positioning Systems

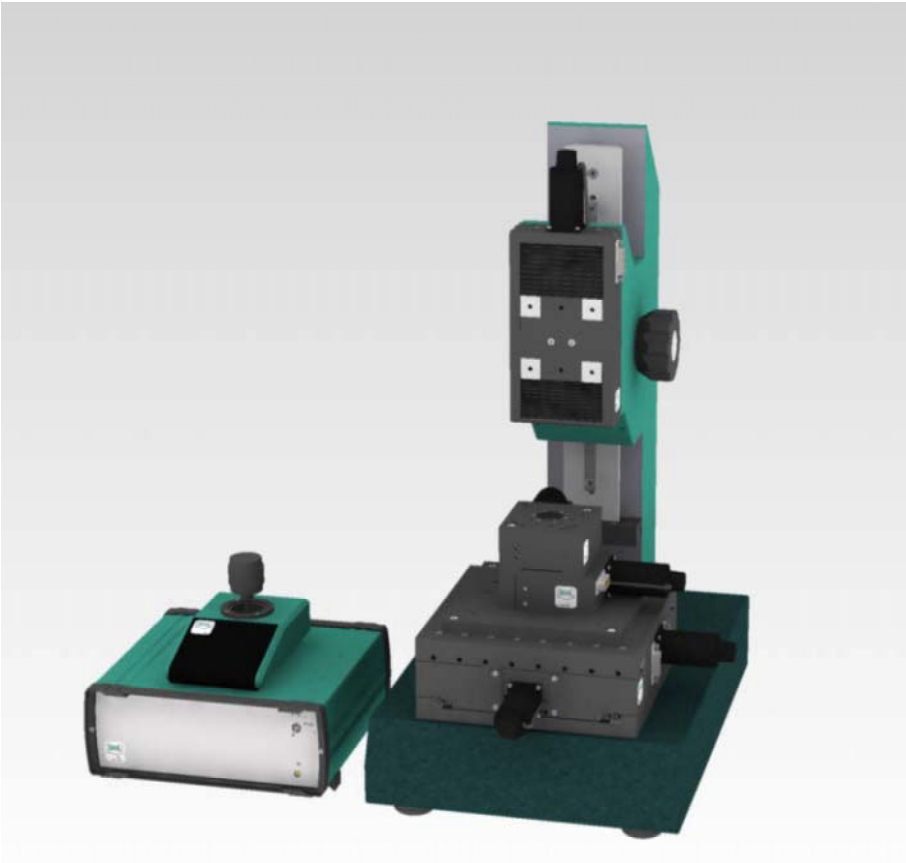

1. Linear Stages

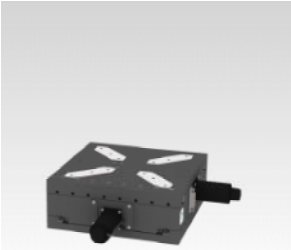

2. XY Stages

3. Rotary Stages

4. Lift Stages

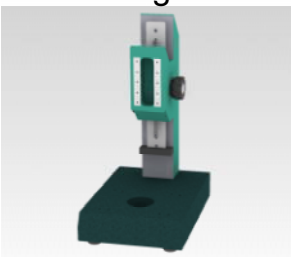

5. Stands & Accessories

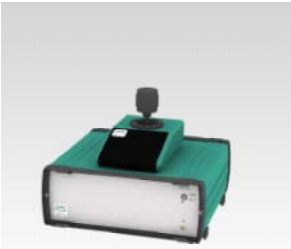

6. Motion Controller

The company
Walter Uhl technische Mikroskopie GmbH & Co. KG
is a reputed system supplier of high-precision drive solutions with experience in the field of precision mechanics since its founding in 1943.

We offer a broad range of linear and rotary stages as well as motion contollers, stands, and customized systems for research, science and industry.

Revision No: 04

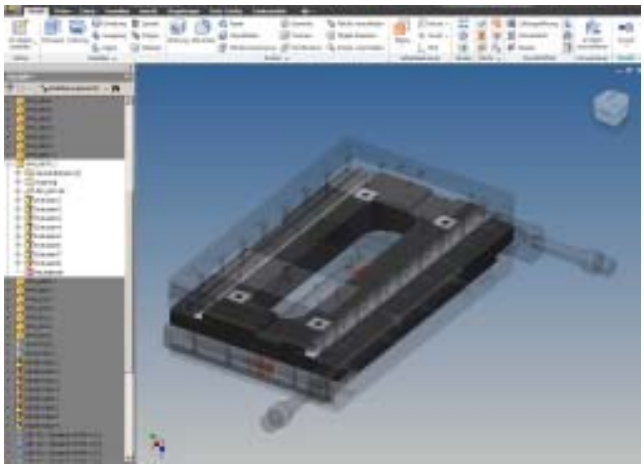

INNOVATION

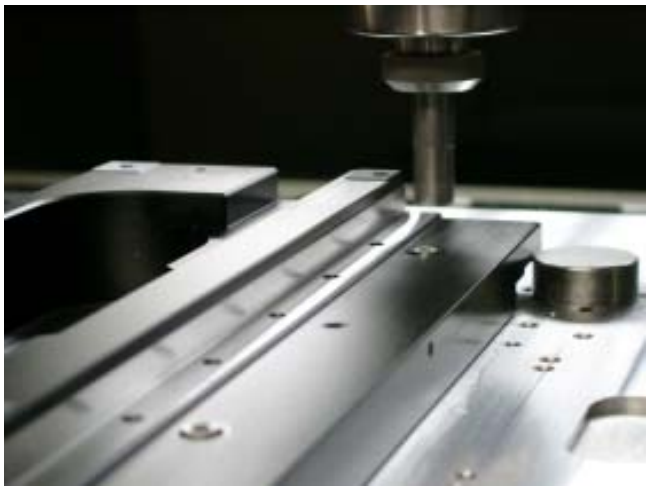

EXPERIENCE

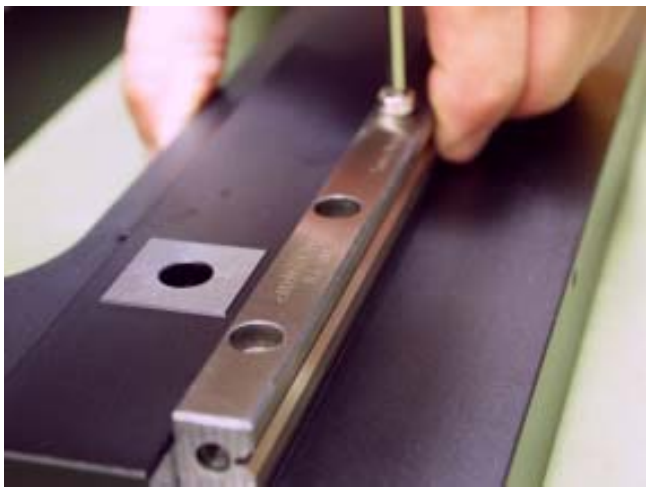

ACCURACY

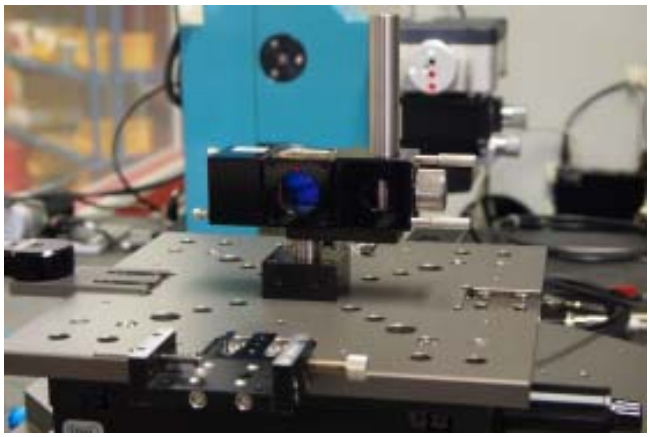

PRECISION

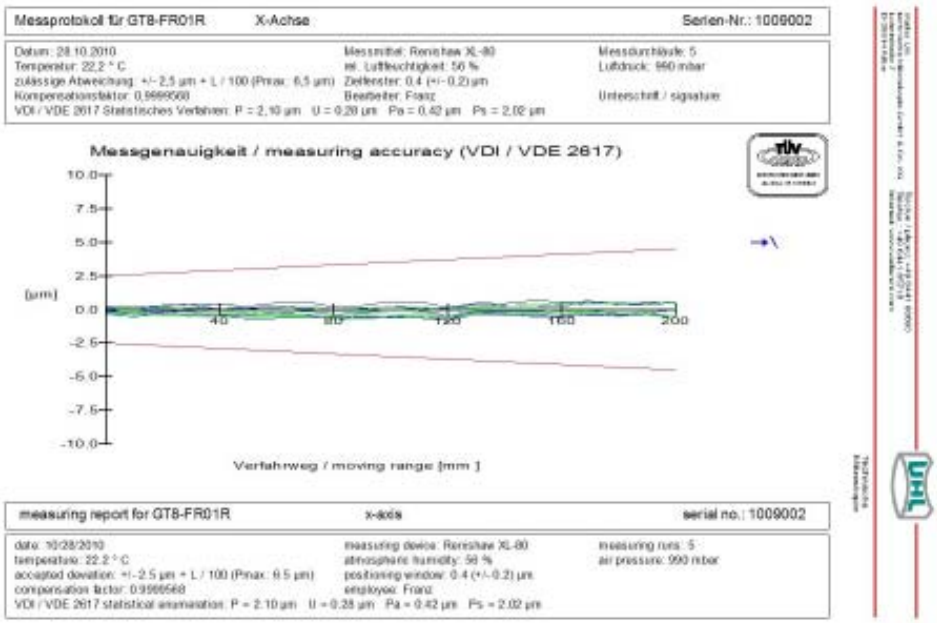

Messprotokoll für GT8-FR01R X-Achse Serien-Nr.: 1009002

Datum: 28.10.2010
Temperatur: 22,2 ° C
zulässige Abweichung: +/- 2,5 µm + L / 100 (Pmax: 6,5 µm)
Kompensationsfaktor: 0,9999568
VDI / VDE 2617 Statistisches Verfahren: P = 2,10 µm U = 0,28 µm Pa = 0,42 µm Ps = 2,02 µm

Messmittel: Renishaw XL-80
rel. Luftfeuchtigkeit: 56 %
Zeitfenster: 0,4 (+/- 0,2) µm
Bearbeiter: Franz

Messdurchläufe: 5
Luftdruck: 990 mbar

Unterschrift / signature

Messgenauigkeit / measuring accuracy (VDI / VDE 2617)

measuring report for GT8-FR01R x-axis serial no.: 1009002

date: 10/28/2010
temperature: 22.2 ° C
accepted deviation: +/- 2.5 µm + L / 100 (Pmax: 6.5 µm)
compensation factor: 0.9999568
VDI / VDE 2617 statistical examination: P = 2.10 µm U = 0.28 µm Pa = 0.42 µm Ps = 2.02 µm

measuring device: Renishaw XL-80
atmosphere humidity: 56 %
positioning window: 0.4 (+/- 0.2) µm
employee: Franz

measuring runs: 5
air pressure: 990 mbar

QUALITY

1. Linear Stages

LT Series

The linear stages of the LT series are distinguished by their compact design and high accuracy.
Bellows protect guides, ball screws and measuring systems against external influences.
The linear stages of the LT series are available in travel range of 50 to 300 mm.

Revision No: 04

Linear Stage

LT5

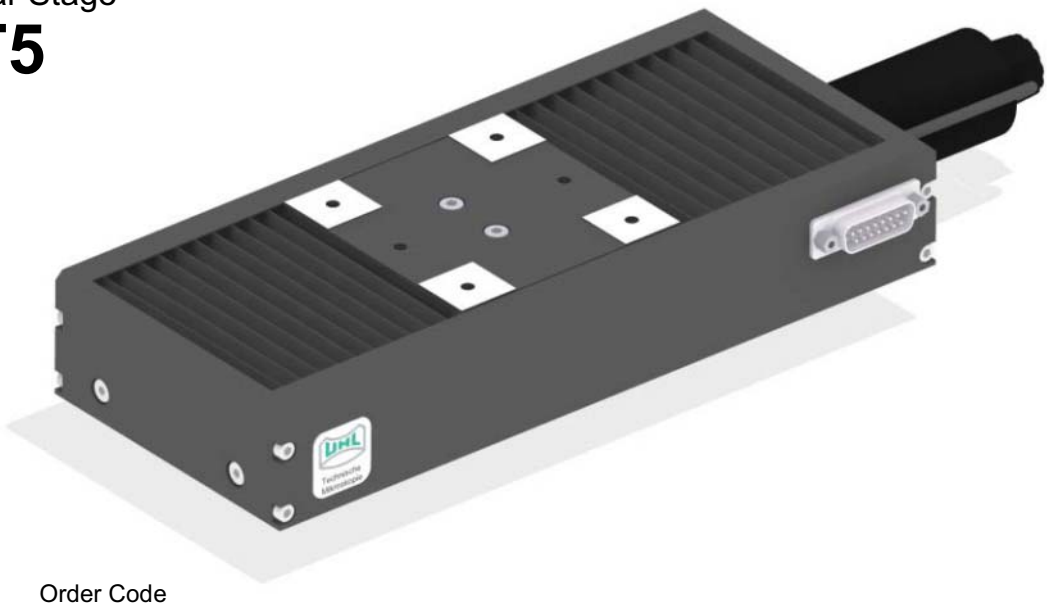

Order Code

LT5-LSOC

Accuracy Class:
A: straightness, flatness: 1 µm / 50 mm
delivery with measuring protocol
C: straightness, flatness 2.5 µm / 50 mm

Measuring System:
O: without measuring system
M: linear encoder, 1 Vpp,
20 µm pitch, reference mark at midpoint,
steel scale, positioning accuracy:
2.5 µm + L/200 (L in mm),
delivery with measuring protocol
D: rotary encoder

Motors:
S: stepper motor Phytron ZSS33.200.1,2
G: DC motor Maxon RE025 24V

Traveling Range:
N: 50 mm
L: 100 mm
M: 170 mm

Sample Configurations:

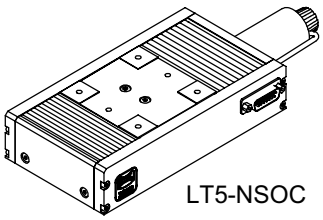

LT5-NSOC

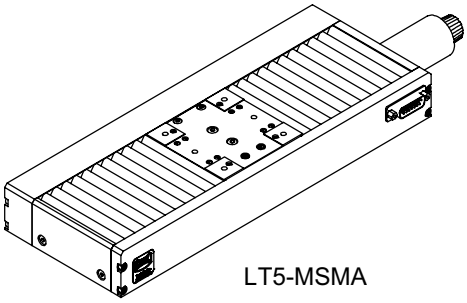

LT5-MSMA

Specifications:

Travel N:	50 mm
Travel L:	100 mm
Travel M:	170 mm
Material:	Stress-relieved aluminum alloy, black anodized
Guiding N, L:	Backlash-free preloaded cross roller guides with anti-creeping cages
Guiding M:	Backlash-free preloaded linear guideways
Drive:	Backlash-free preloaded ballscrew, pitch 1 mm
Weight N:	1.8 kg
Weight L:	2 kg
Weight M:	2.7 kg

Options:
- custom motors
- encoder TTL

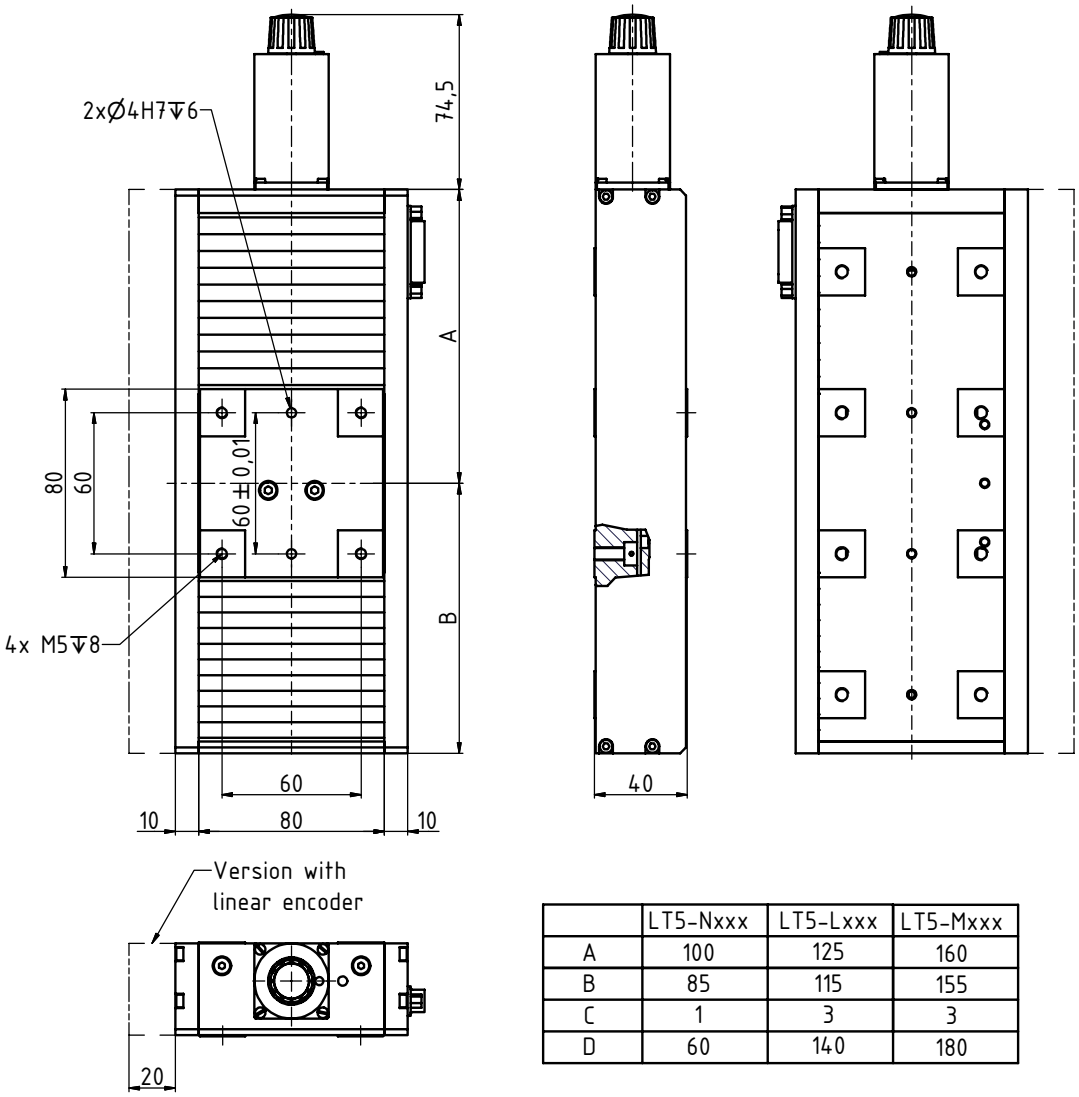

	LT5-Nxxx	LT5-Lxxx	LT5-Mxxx
A	100	125	160
B	85	115	155
C	1	3	3
D	60	140	180

Revision No: 04

Linear Stage

LT6

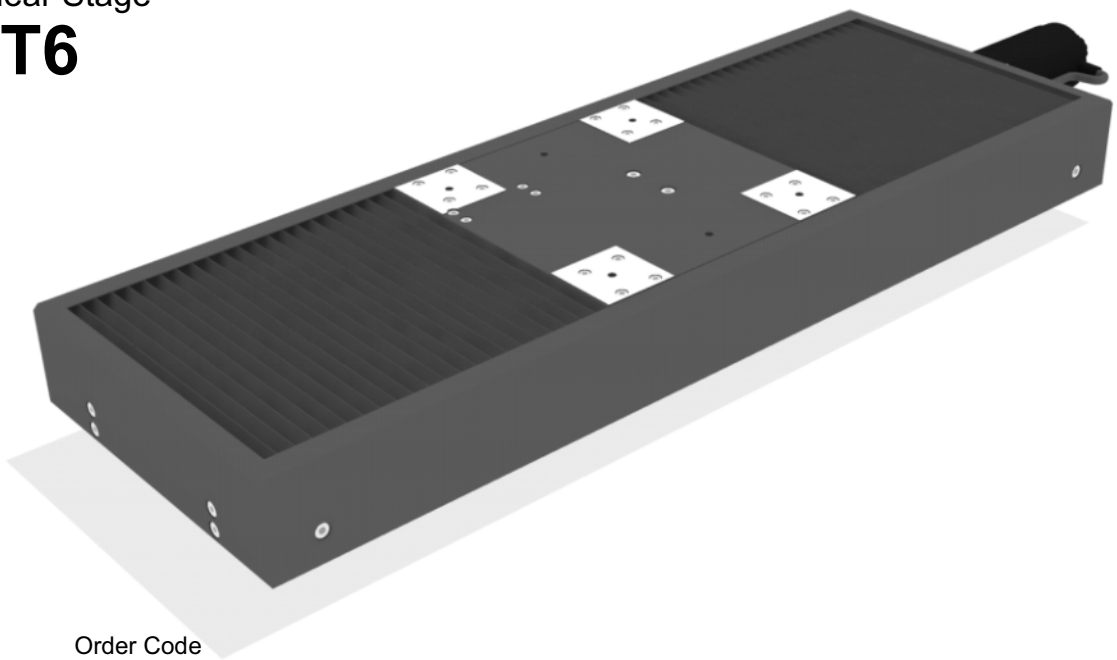

Order Code

LT6-LSMA

Accuracy Class:
- A: straightness, flatness: 1 µm / 100 mm delivery with measuring protocol
- C: straightness, flatness: 2 µm / 100 mm

Measuring System:
- O: without measuring system
- M: linear encoder, 1 Vpp, 20 µm pitch, reference mark at midpoint, steel scale, positioning accuracy: 2.5 µm + L/200 (L in mm), delivery with measuring protocol
- D: rotary encoder

Motors:
- S: stepper motor Phytron ZSS33.200.1,2
- G: DC motor Maxon RE025 24V
- Z: stepper motor Phytron ZSS43.200.2,5 with magnetic brake

Traveling Range:
- N: 200 mm
- L: 300 mm

Sample Configurations:

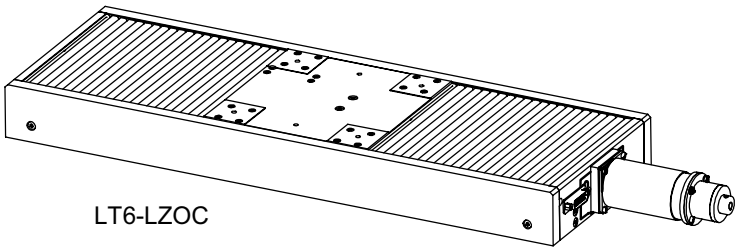

LT6-LZOC

Specifications:

Travel N:	200 mm
Travel L:	300 mm
Material:	Stress-relieved aluminum alloy, black anodized
Guiding:	Backlash-free preloaded linear guideways
Drive:	Backlash-free preloaded ballscrew, pitch 2 mm
Weight N:	7 kg
Weight L:	9.5 kg

Options:
- custom motors
- encoder TTL

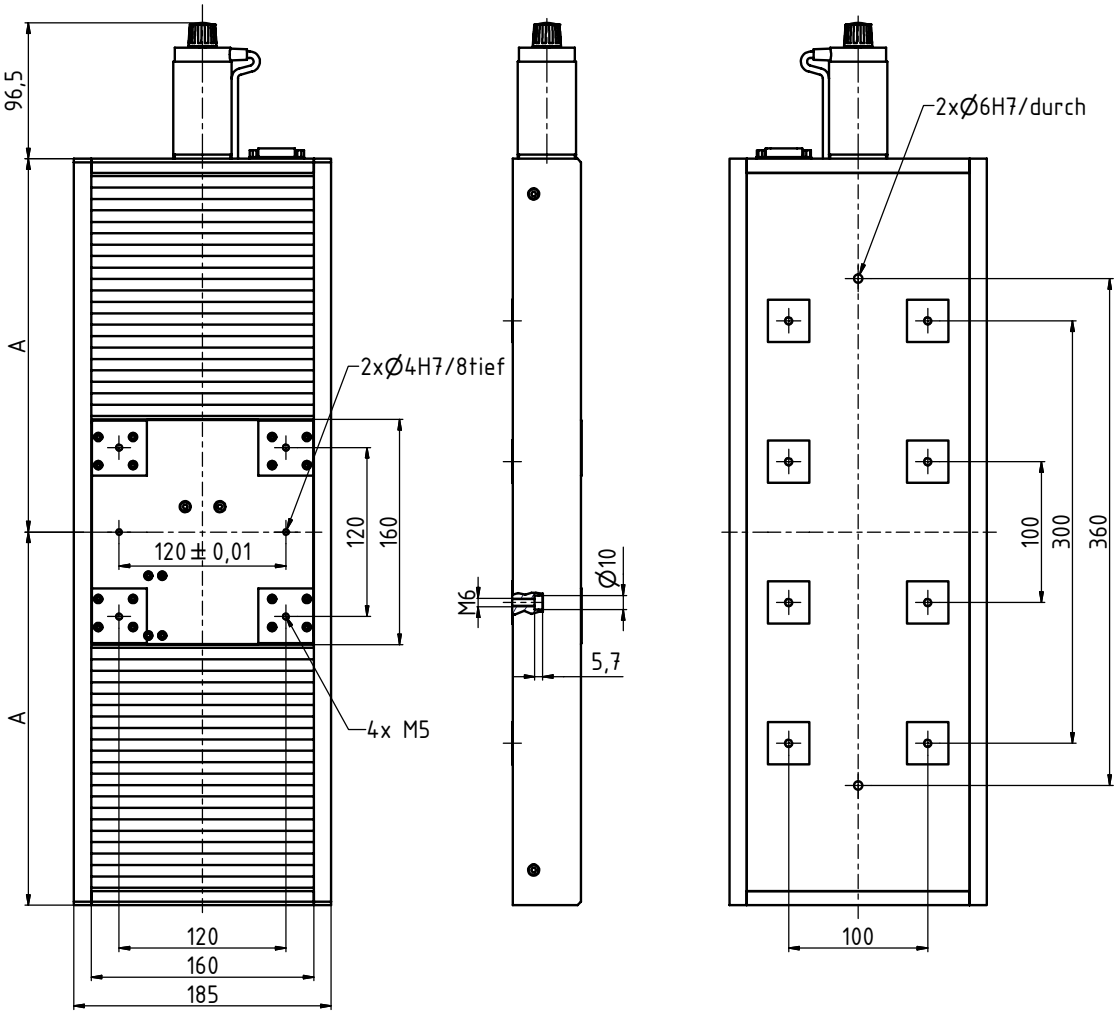

	LT6-Nxxx	LT6-Lxxx
A	225	265

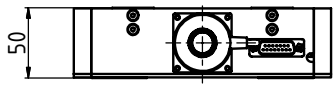

Revision No: 04

Linear Stage

LT8

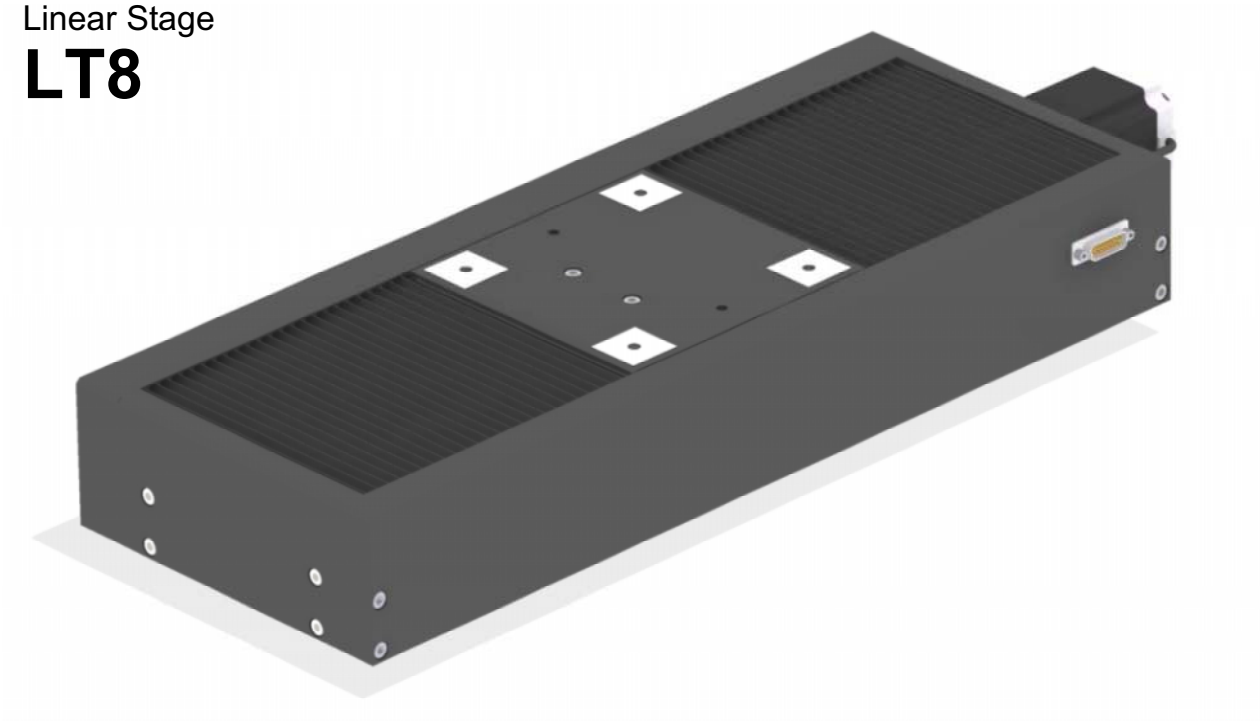

Order Code

LT8-LSMA

Accuracy Class:
A: straightness, flatness: 1 µm / 100 mm
delivery with measuring protocol
C: straightness, flatness: 2 µm / 100 mm

Measuring System:
O: without measuring system
M: linear encoder, 1 Vpp,
20 µm pitch, reference mark at midpoint,
positioning accuracy:
2.5 µm + L/200 (L in mm),
delivery with measuring protocol
D: rotary encoder

Motors:
S: stepper motor
Z: stepper motor with magnetic brake

Traveling Range:
N: 200 mm
L: 300 mm

Specifications:

Travel N:	200 mm
Travel L:	300 mm
Material:	Stress-relieved aluminum alloy, black anodized
Guiding:	Backlash-free preloaded cross roller guides
Drive:	Backlash-free preloaded ballscrew, pitch 5 mm
Weight N:	14 kg
Weight L:	18 kg

Options:
- custom motors
- encoder TTL

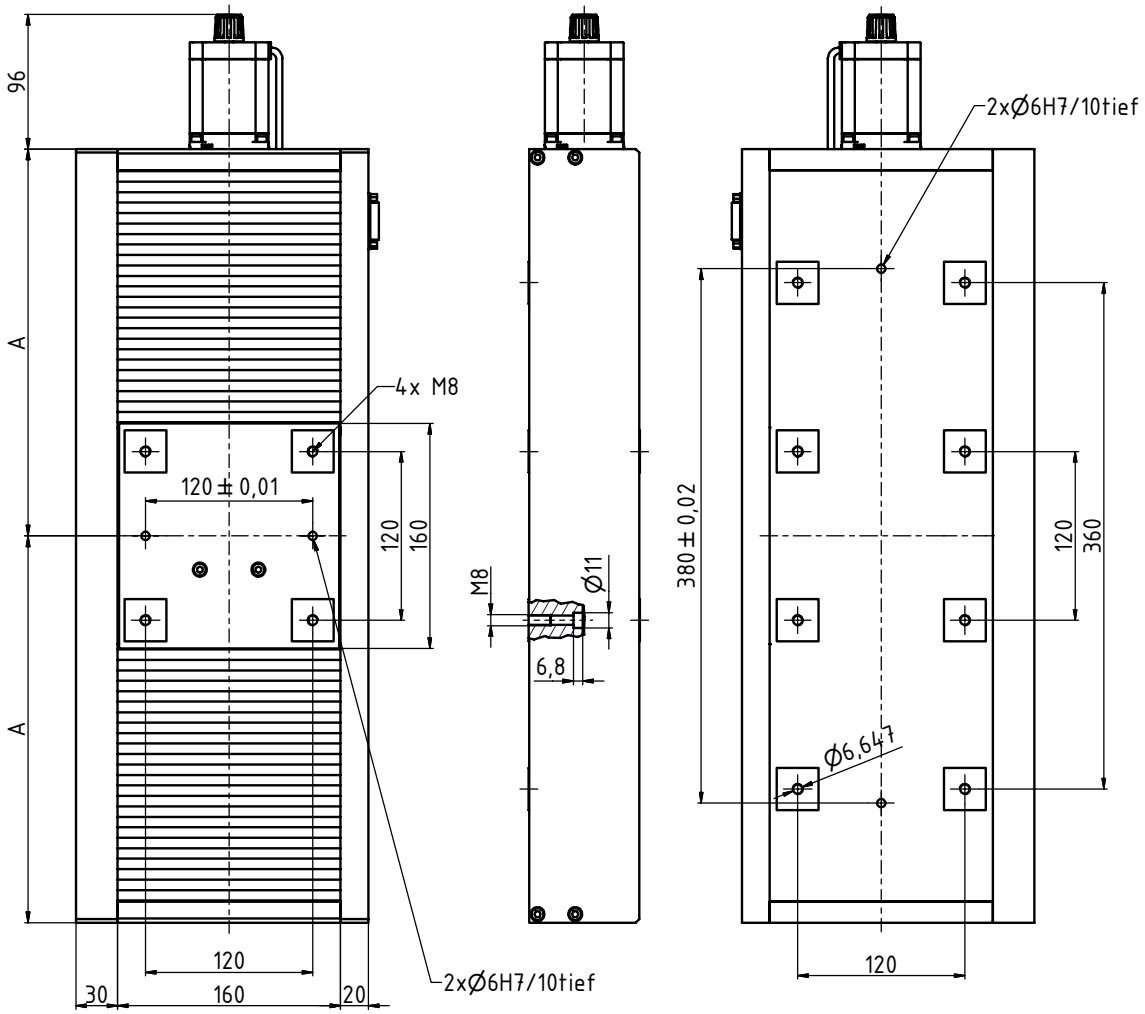

	LT8-Nxxx	LT8-Lxxx
A	225	275

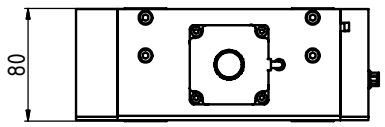

Revision No: 04

Application example

Special setup for measuring semiconductor structures

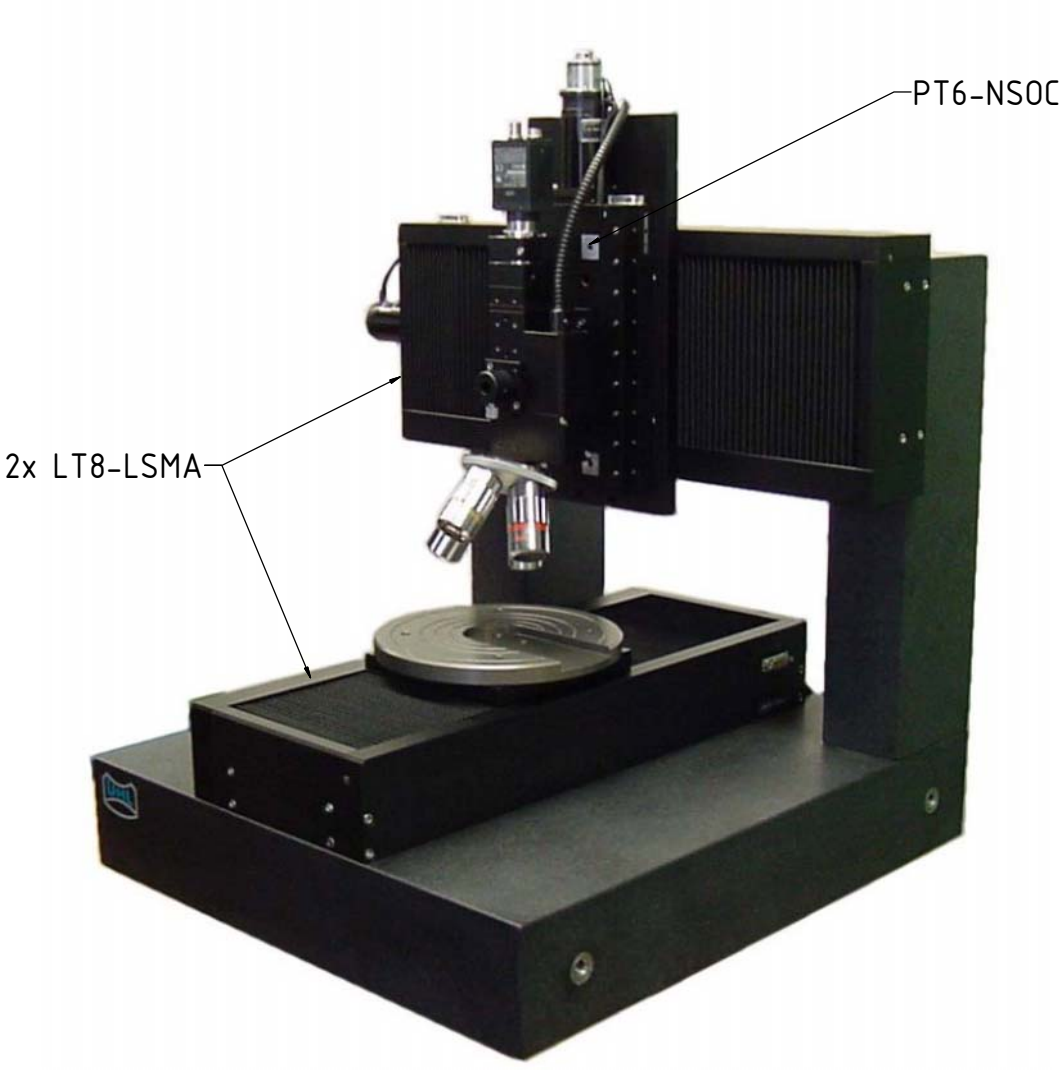

Walter Uhl
technische Mikroskope GmbH & Co. KG
Loherstrasse 7
D-35614 Asslar
Telefon: ++49 (0) 6441 8 86 03
Telefax: ++49 (0) 6441 8 57 18
email: walteruhl@t-online.de
Internet: www.walteruhl.com

Linear Stages

PT Series

Revision No: 04

The linear stages of the PT series are distinguished by their compact design and high accuracy. Because of their structure without protruding roller cages they are more accurate and have a higher load capacity than the LT series. They are particularly suitable for use as a vertical axis.

The linear stages of the PT series are available in travel range of 25 to 300 mm.

Precision Linear Stage

PT3

Order Code

PT3-NSOC

Accuracy Class:
C: straightness, flatness: 2 µm / 25 mm

Measuring System:
O: without measuring system
D: rotary encoder

Motors:
S: stepper motor Faulhaber AM1524 with gearbox 15/5 or 15/8
G: DC motor Faulhaber 1524E012SR with gearbox 15/5 or 15/8

Traveling Range:
N: 25 mm

Sample Configurations:

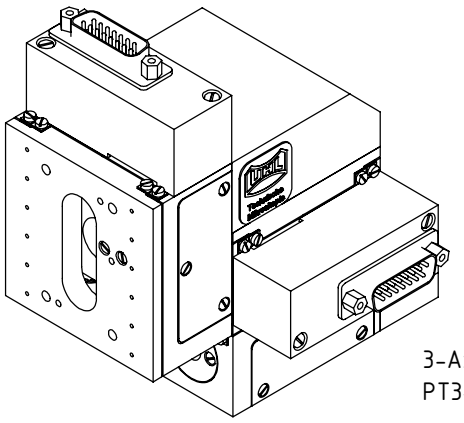

3-Axis-Manipulator
PT3-D3L

Specifications:

Travel :	25 mm
Material:	Stress-relieved aluminum alloy, anodized
Guiding:	Backlash-free preloaded cross roller guides
Drive:	Low-backlash leadscrew, pitch 0.5 mm
Weight:	0.3 kg

Options:
- custom motors
- encoder TTL

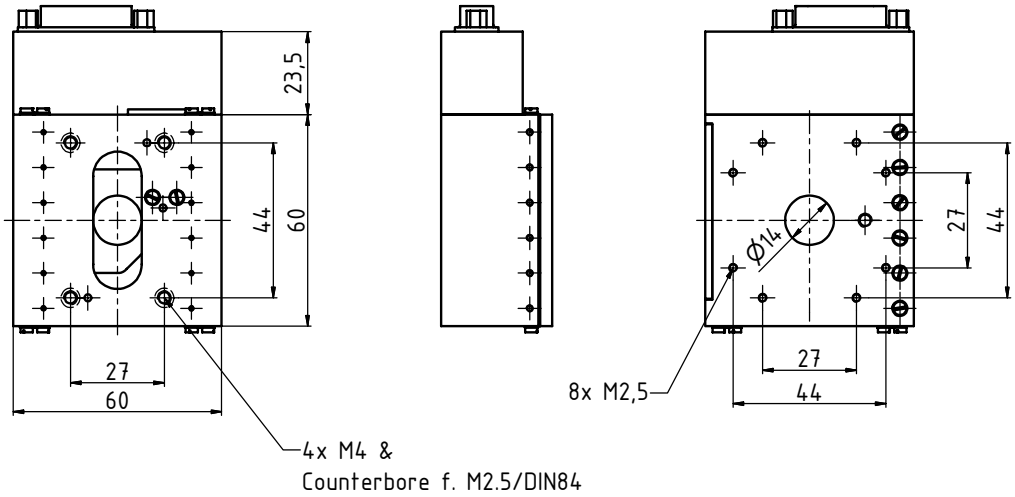

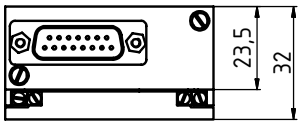

Revision No: 04

Precision Linear Stage

PT4

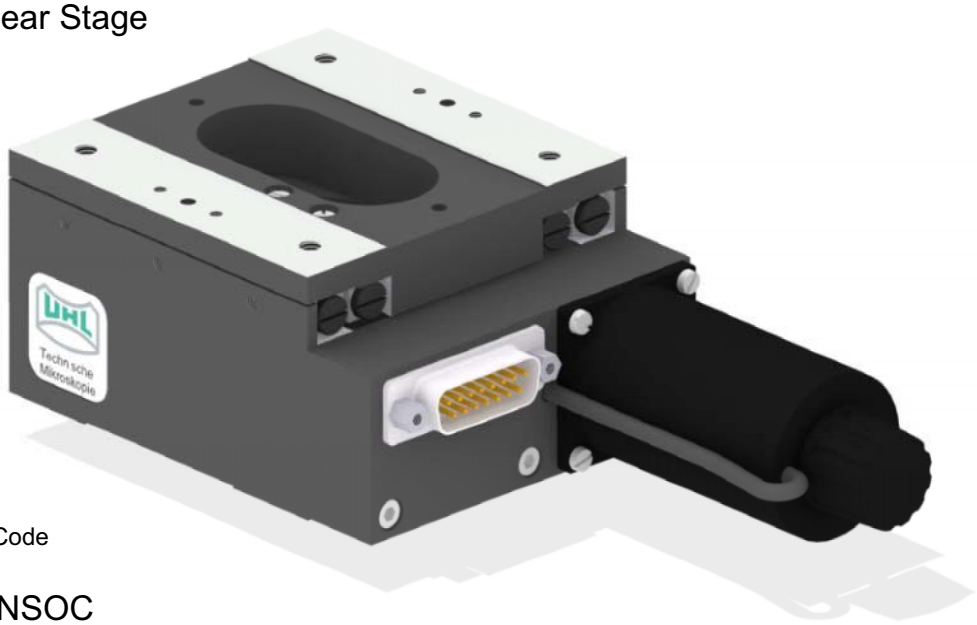

Order Code

PT4-NSOC

Accuracy Class:
A: straightness, flatness: 0.5 µm / 25 mm
delivery with measuring protocol
C: straightness, flatness: 1 µm / 25 mm

Measuring System:
O: without measuring system
M: linear encoder, 1 Vpp,
20 µm pitch, reference mark at midpoint,
gold-scale, positioning accuracy:
2.5 µm + L/200 (L in mm),
delivery with measuring protocol
D: rotary encoder

Motors:
S: stepper motor Phytron ZSS33.200.1,2
(PT4-K: stepper motor ST2018L0804)
G: DC motor Maxon RE025 24V

Traveling Range:
N: 25 mm
L: 50 mm
K: 25 mm

Sample Configurations:

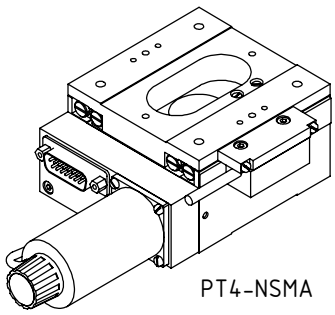

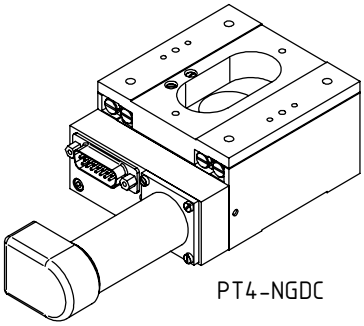

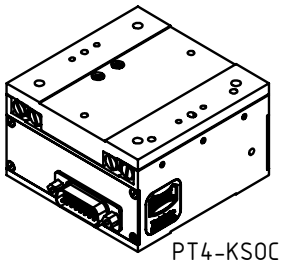

Specifications:

Travel N/K:	25 mm
Travel L:	50 mm
Material:	Stress-relieved aluminum alloy, black anodized
Guiding:	Backlash-free preloaded cross roller guides
Drive:	Backlash-free preloaded ballscrew, pitch 1 mm
Weight:	1.2 kg

Options:
- custom motors
- encoder TTL

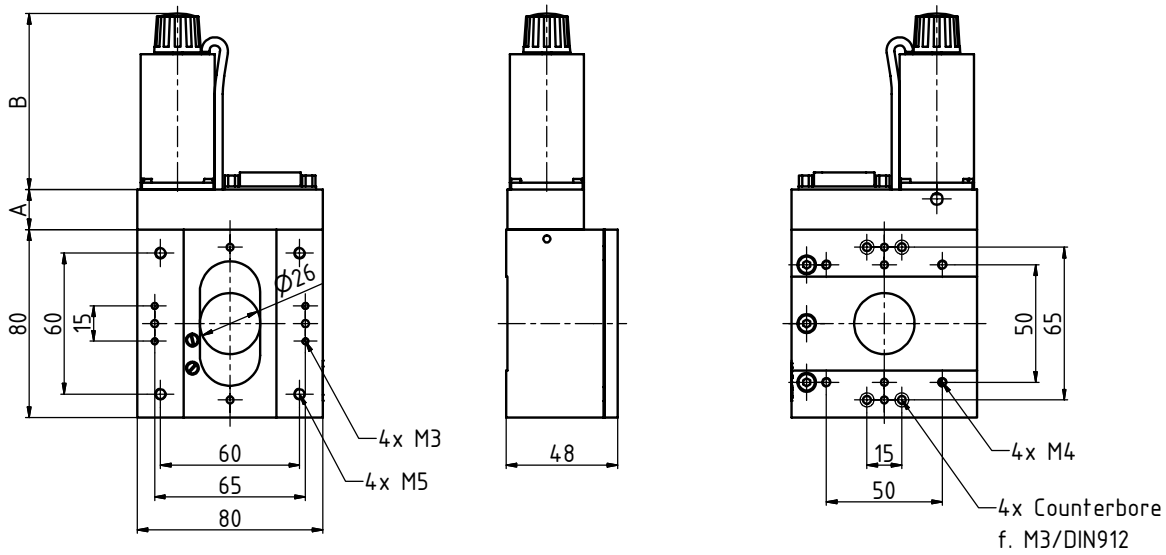

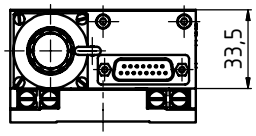

	PT4-Nxxx	PT4-Lxxx	PT4-Kxxx
A	17	30	0
B	75	75	0

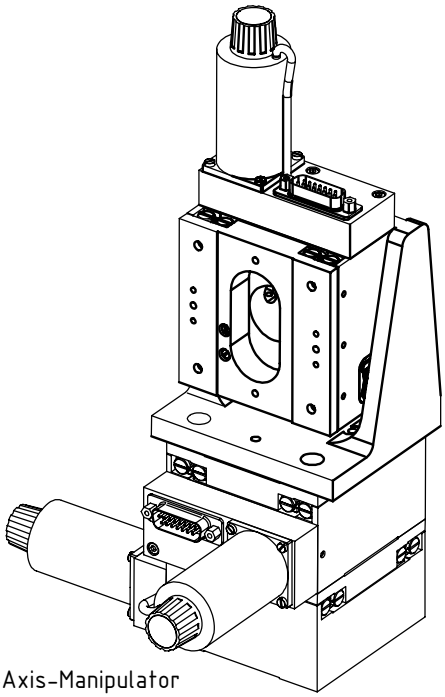

3-Axis-Manipulator
PT4-S3

Revision No: 04

Precision Linear Stage

PT5

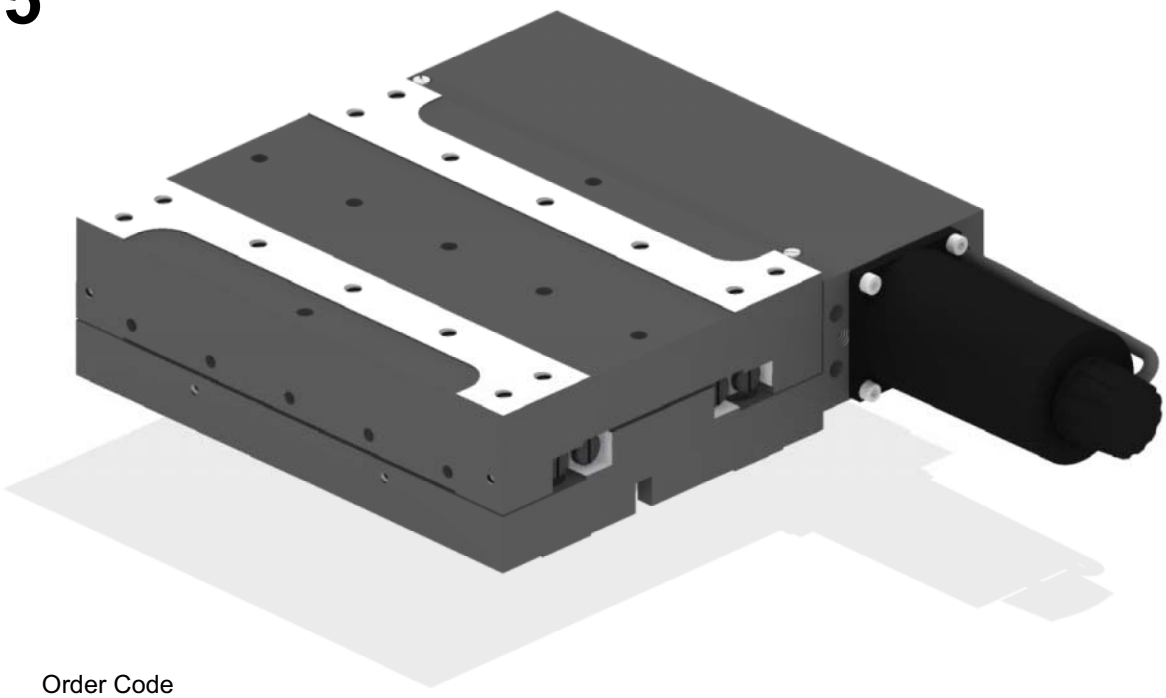

Order Code

PT5-NSOC

Accuracy Class:
A: straightness, flatness: 0,5 µm / 50 mm
delivery with measuring protocol
C: straightness, flatness: 1 µm / 50 mm

Measuring System:
O: without measuring system
M: linear encoder, 1 Vpp,
20 µm pitch, reference mark at midpoint,
steel scale, positioning accuracy:
1.5 µm + L/200 (L in mm),
delivery with measuring protocol
D: rotary encoder

Motors:
S: stepper motor Phytron ZSS33.200.1,2
G: DC motor Maxon RE025 24V
Z: stepper motor Phytron ZSS43.200.2,5
with magnetic brake

Traveling Range:
N: 50 mm

Sample Configurations:

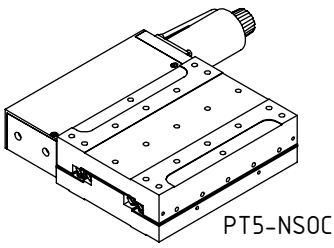

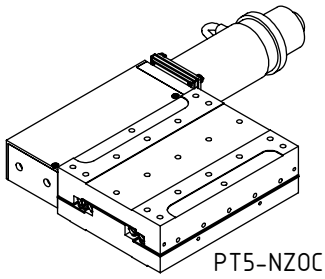

Specifications:

Travel:	50 mm
Material:	Stress-relieved aluminum alloy, black anodized
Guiding:	Backlash-free preloaded cross roller guides
Drive:	Backlash-free preloaded ballscrew, pitch 1 mm
Weight:	2.4 kg

Options:
- custom motors
- encoder TTL

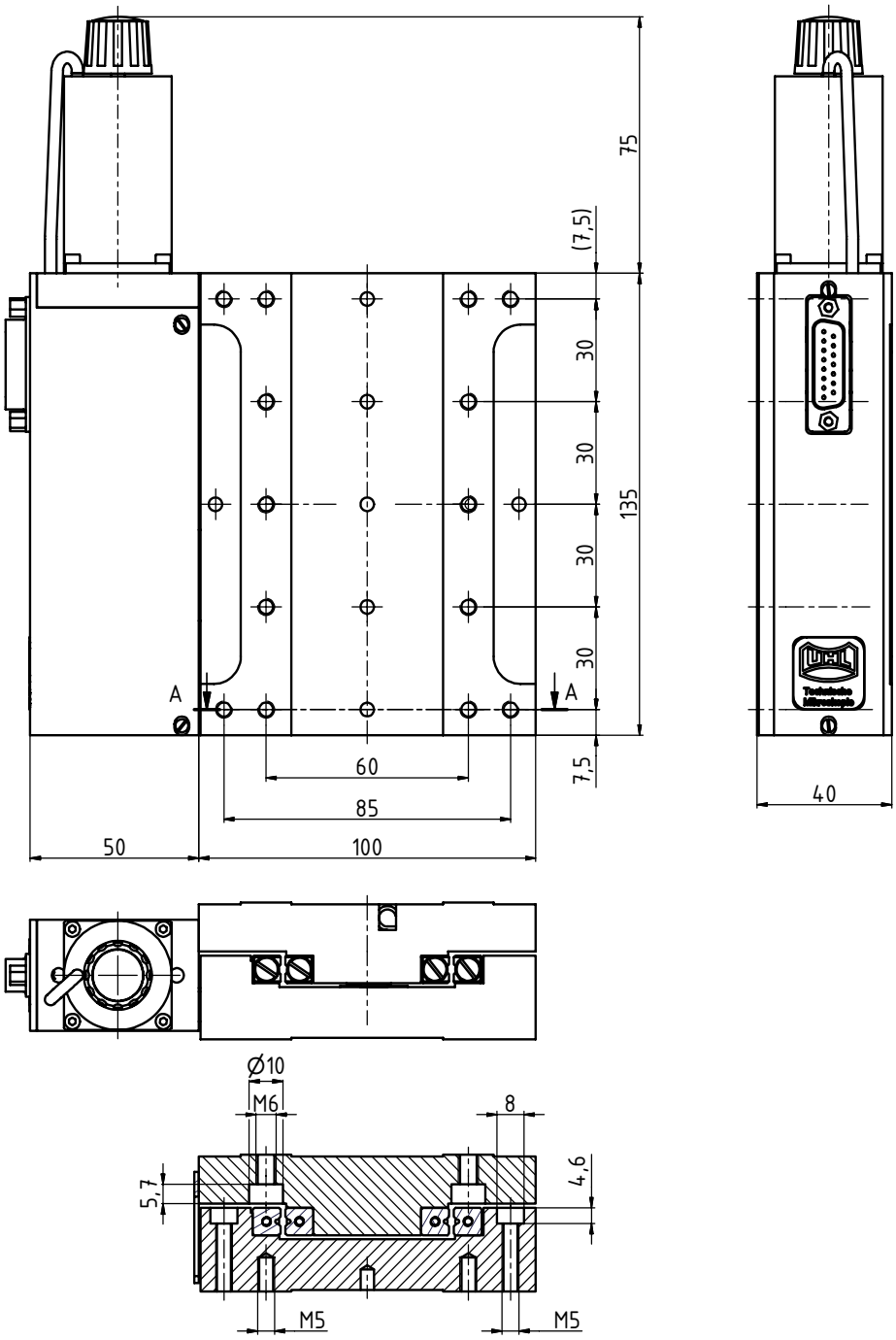

Revision No: 04

Precision Linear Stage

PT6

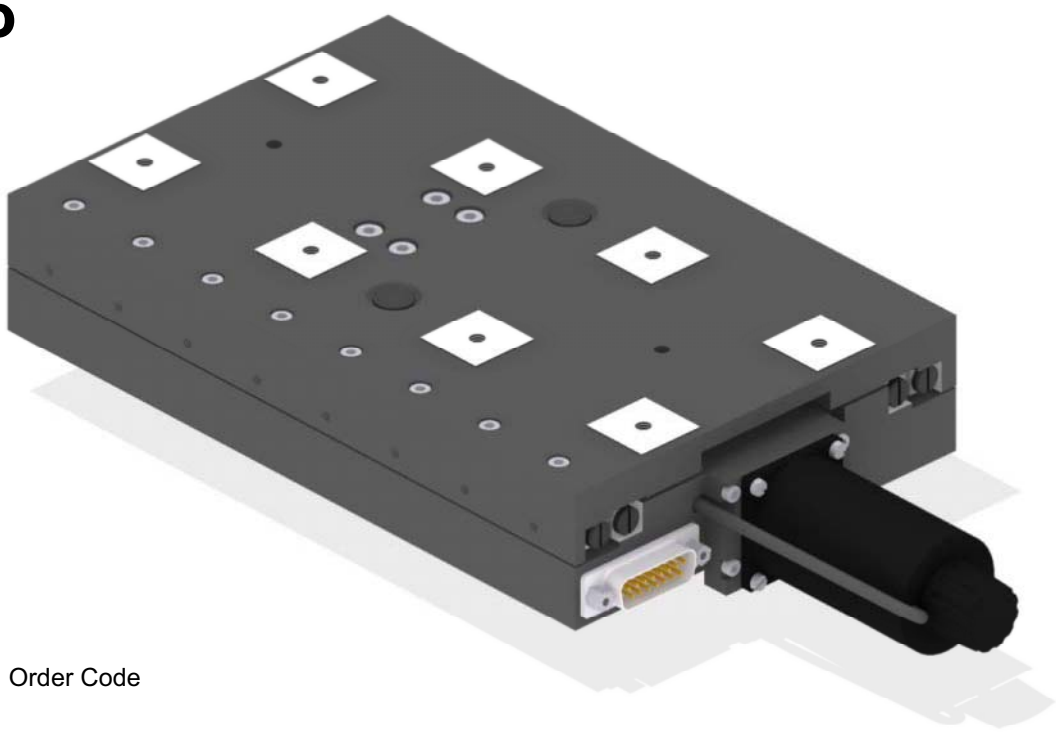

Order Code

PT6-NSOC

Accuracy Class:
A: straightness, flatness: 1 µm / 100 mm
delivery with measuring protocol
C: straightness, flatness: 3 µm / 100 mm

Measuring System:
O: without measuring system
M: linear encoder, 1 Vpp,
20 µm pitch, reference mark at midpoint,
steel scale, positioning accuracy:
1.5 µm + L/200 (L in mm),
delivery with measuring protocol
D: rotary encoder

Motors:
S: stepper motor Phytron ZSS33.200.1,2
G: DC motor Maxon RE025 24V
Z: stepper motor Phytron ZSS43.200.2,5
with magnetic brake

Traveling Range:
N: 100 mm

Sample Configurations:

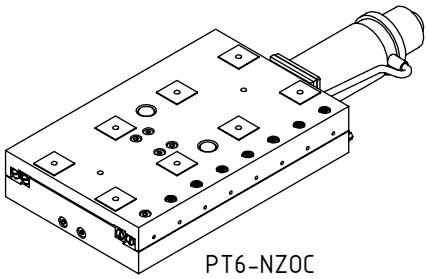

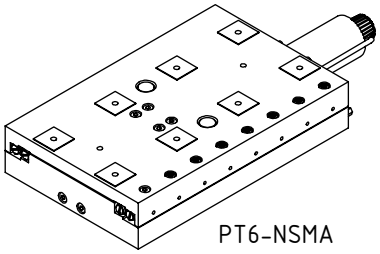

Specifications:

Travel N:	100 mm
Material:	Stress-relieved aluminum alloy, black anodized
Guiding:	Backlash-free preloaded cross roller guides
Drive:	Backlash-free preloaded ballscrew, pitch 1 mm
Weight:	3 kg

Options:
- custom motors
- encoder signal TTL

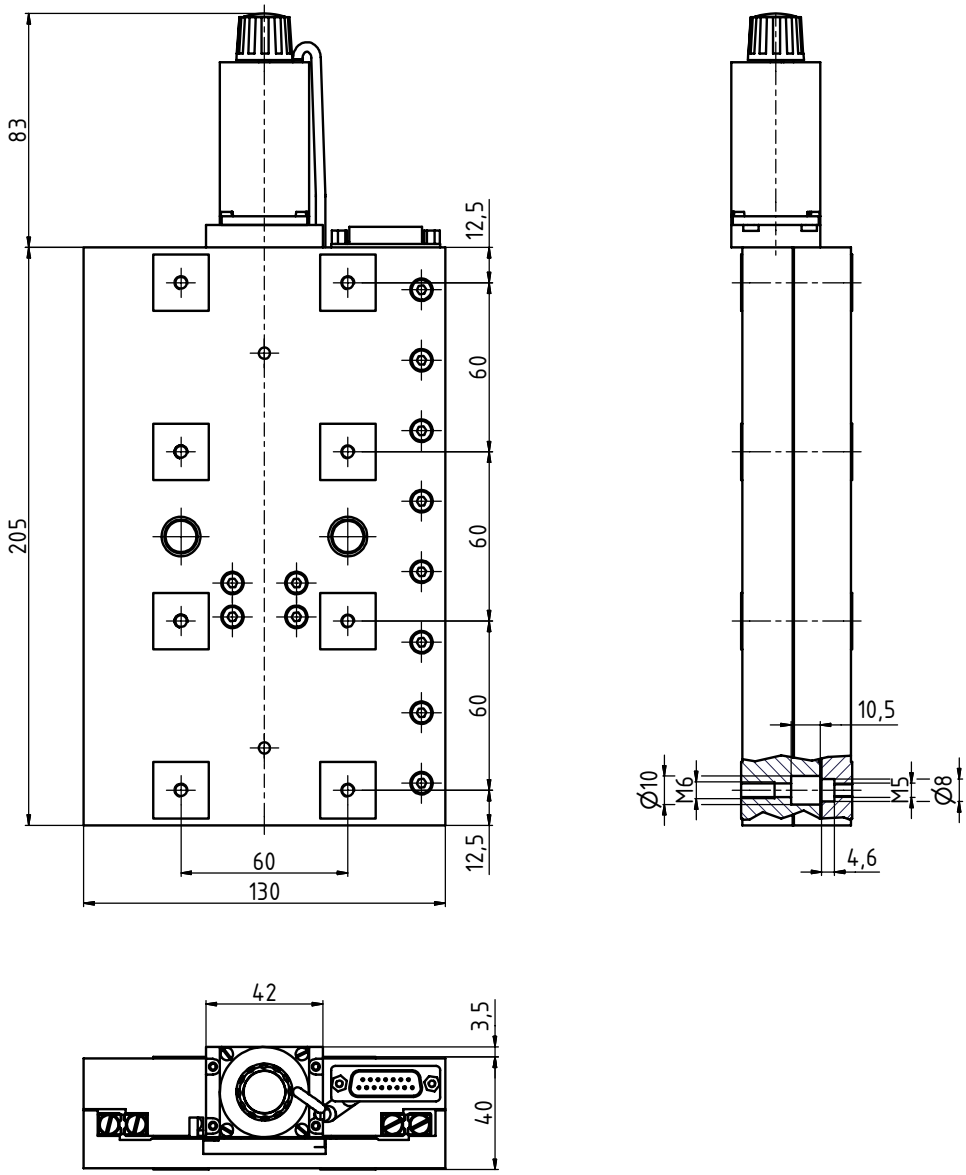

Revision No: 04

Precision Linear Stage

PT7

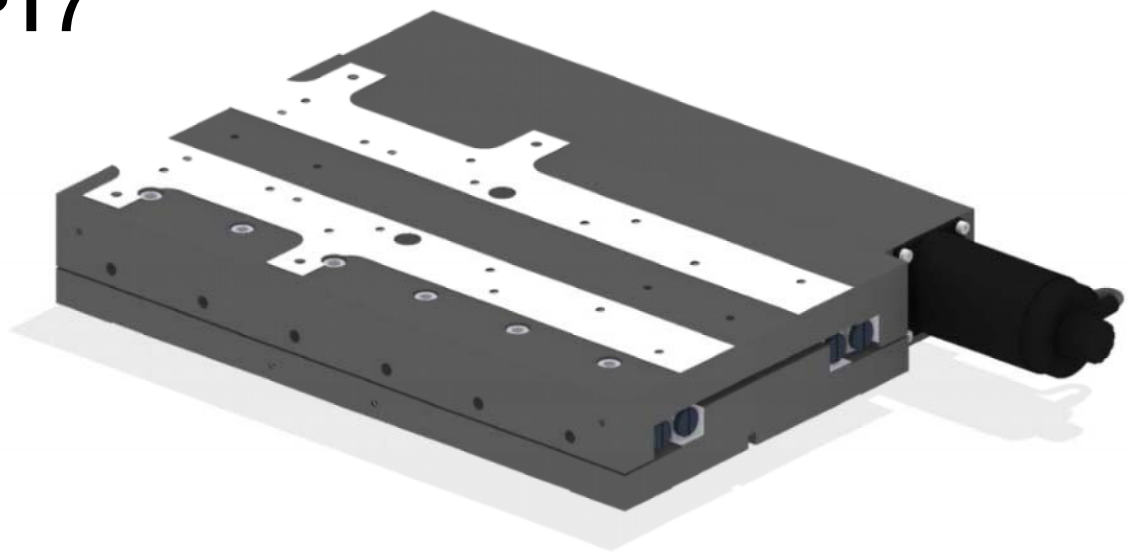

Order Code

PT7-NSOC

Accuracy Class:
A: straightness, flatness: 1 µm / 100 mm
delivery with measuring protocol
C: straightness, flatness: 2 µm / 100 mm

Measuring System:
O: without measuring system
M: linear encoder, 1 Vpp,
20 µm pitch, reference mark at midpoint,
steel scale, positioning accuracy:
1.5 µm + L/200 (L in mm),
delivery with measuring protocol
D: rotary encoder

Motors:
S: stepper motor Phytron ZSS33.200.1,2
G: DC motor Maxon RE025 24V
Z: stepper motor Phytron ZSS43.200.2,5
with magnetic brake

Traveling Range:
N: 150 mm

Sample Configurations:

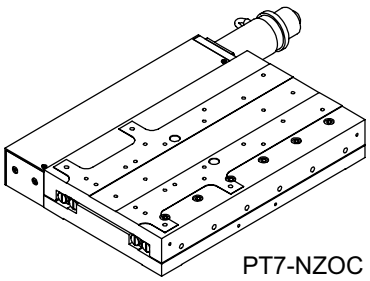

PT7-NZOC

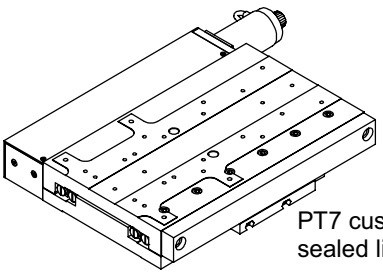

PT7 custom version with
sealed linear encoder

Specifications:

Travel N:	150 mm
Material:	Stress-relieved aluminum alloy, black anodized
Guiding:	Backlash-free preloaded cross roller guides
Drive:	Backlash-free preloaded ballscrew, pitch 2 mm
Weight:	9.5 kg

Options:
- custom motors
- encoder signal TTL
- sealed linear encoder

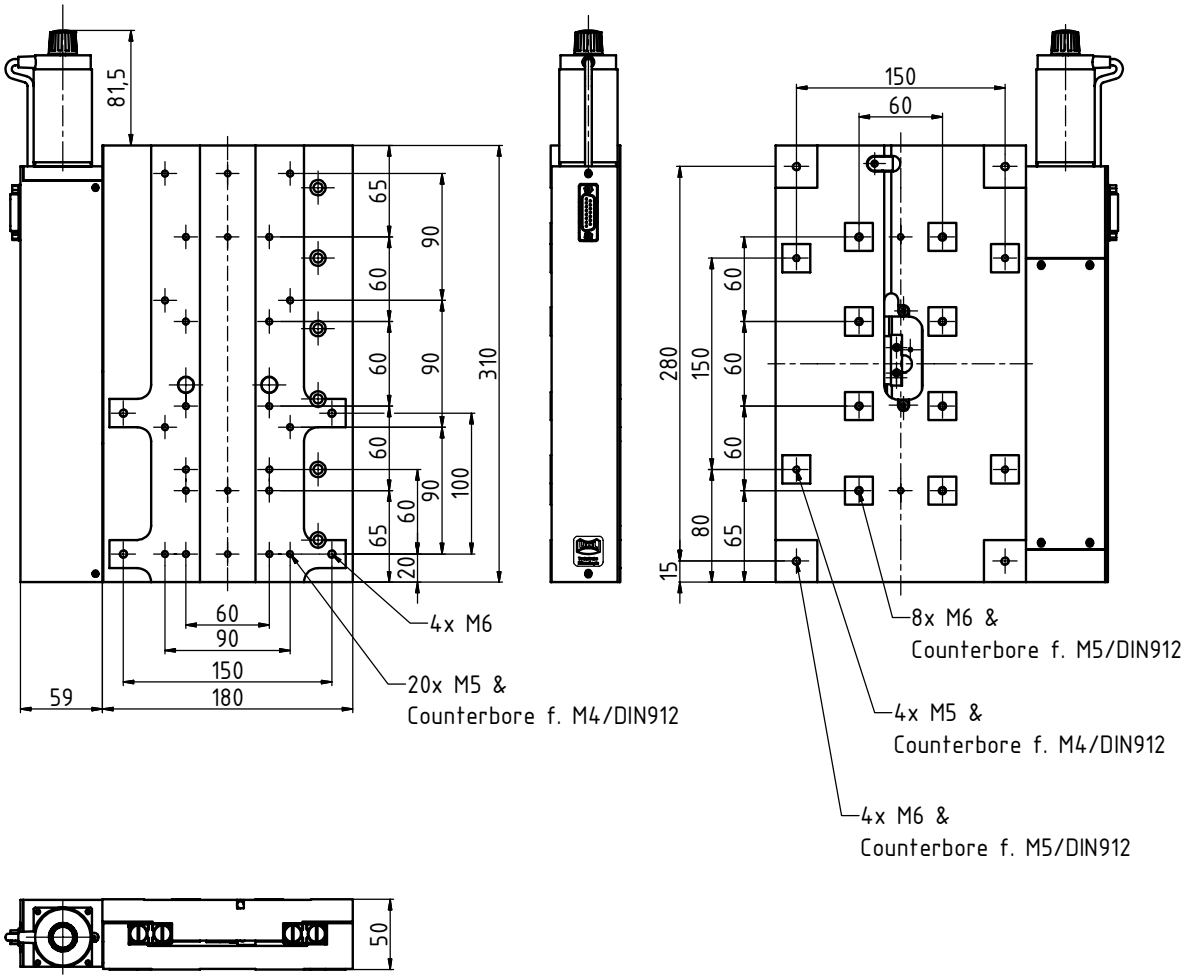

Revision No: 04

Precision Linear Stage

PT8

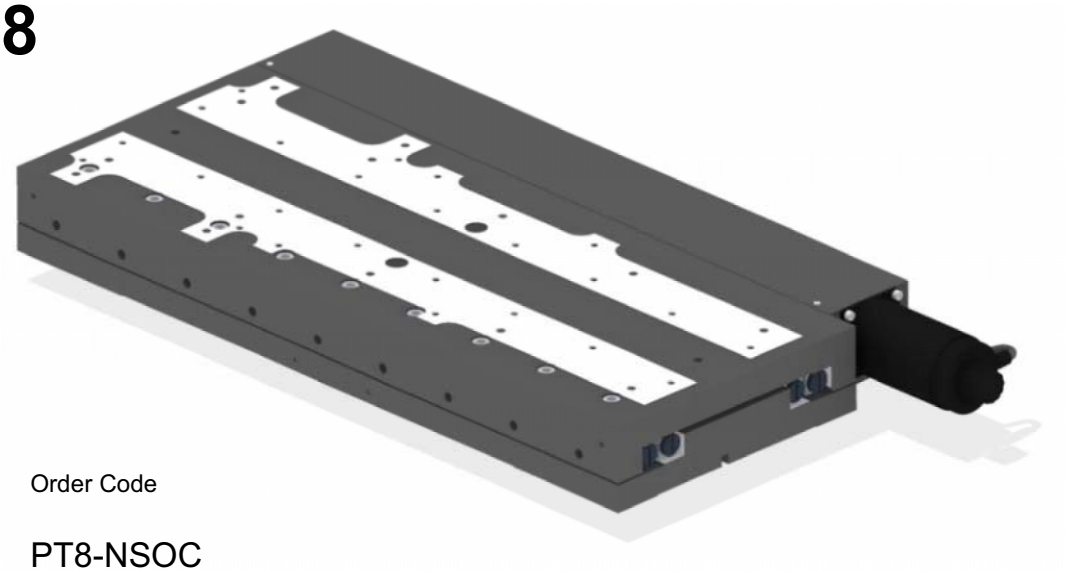

Order Code

PT8-NSOC

Accuracy Class:
A: straightness, flatness: 1 µm / 100 mm
delivery with measuring protocol
C: straightness, flatness: 2 µm / 100 mm

Measuring System:
O: without measuring system
M: linear encoder, 1 Vpp,
20 µm pitch, reference mark at midpoint,
steel scale, positioning accuracy:
1.5 µm + L/200 (L in mm),
delivery with measuring protocol
D: rotary encoder

Motors:
S: stepper motor Phytron ZSS33.200.1,2
G: DC motor Maxon RE025 24V
Z: stepper motor Phytron ZSS43.200.2,5
with magnetic brake

Traveling Range:
N: 200 mm
L: 300 mm

Sample Configurations:

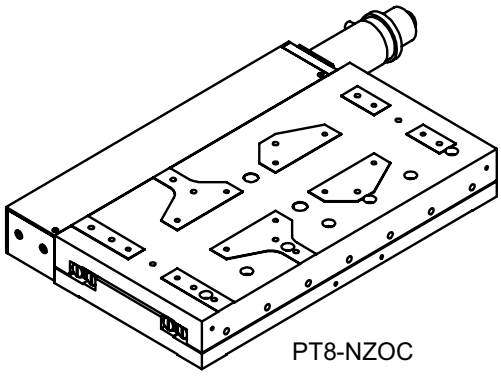

PT8-NZOC

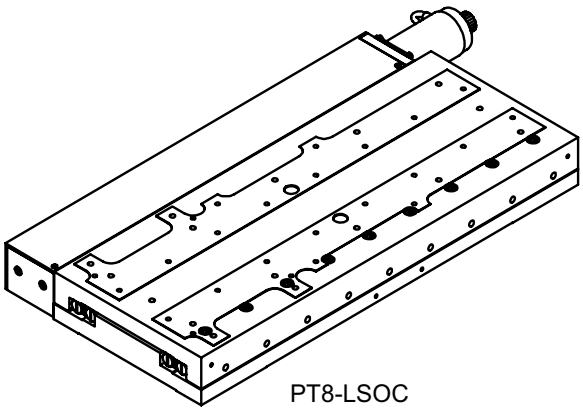

PT8-LSOC

Specifications:

Travel N:	200 mm
Travel L:	300 mm
Material:	Stress-relieved aluminum alloy, black anodized
Guiding:	Backlash-free preloaded cross roller guides
Drive:	Backlash-free preloaded ballscrew, pitch 2 mm
Weight N:	13.2 kg
Weight L:	14.5 kg

Options:
- custom motors
- encoder signal TTL
- sealed linear encoder

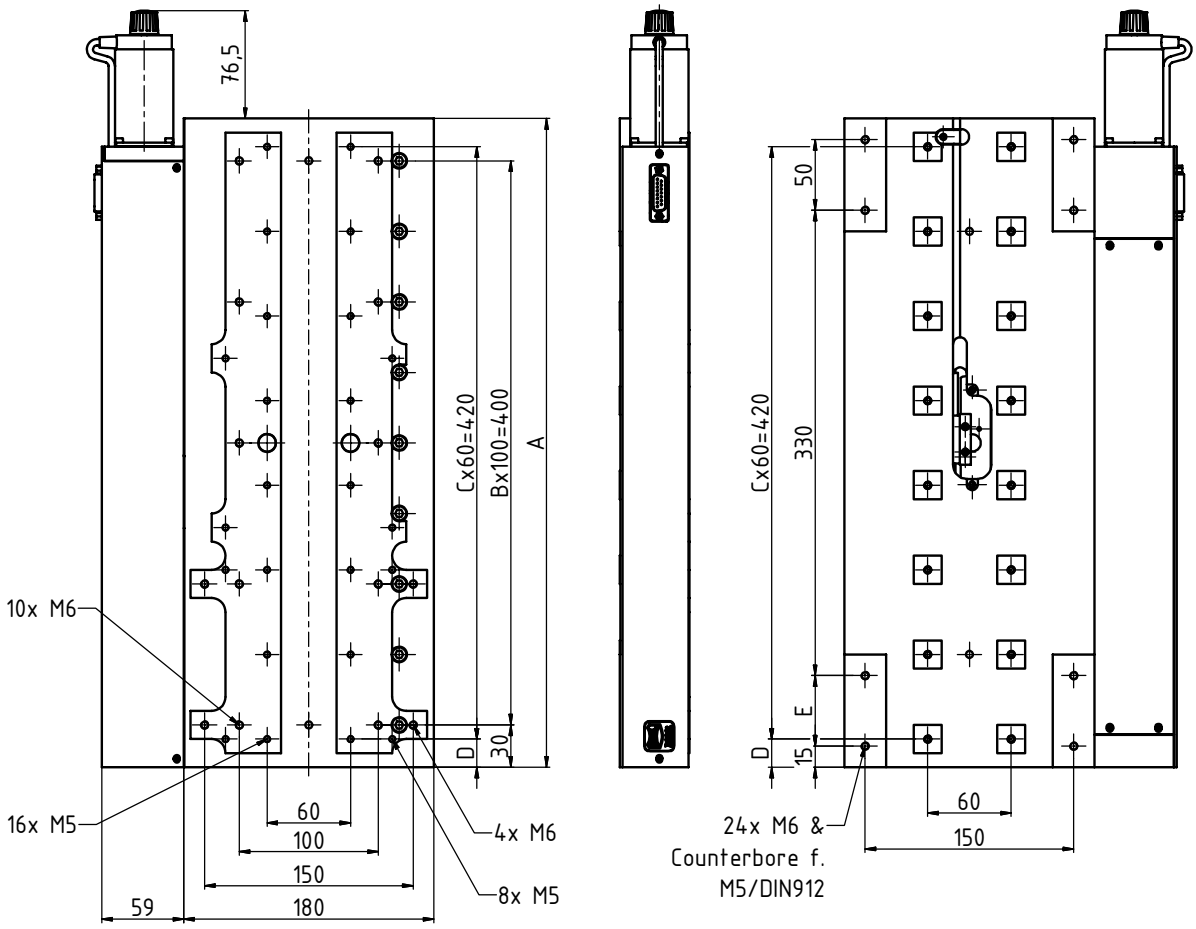

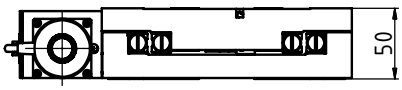

	PT8-Nxxx	PT8-Lxxx
A	360	460
B	3	4
C	5	7
D	30	20
E	0	50

Revision No: 04

Application example

Special setup for measuring shaving heads

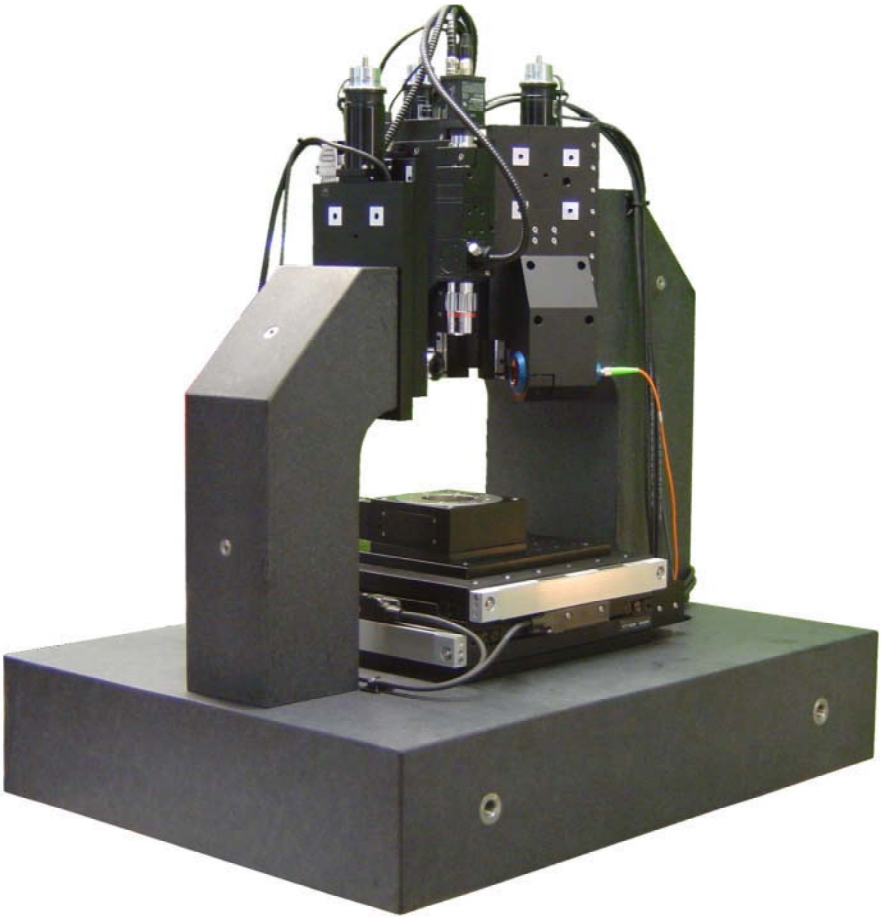

Walter Uhl
technische Mikroskope GmbH & Co. KG
Loherstrasse 7
D-35614 Asslar
Telefon: ++49 (0) 6441 8 86 03
Telefax: ++49 (0) 6441 8 57 18
email: walteruhl@t-online.de
Internet: www.walteruhl.com

2. XY Stages
KT Series

Revision No: 04

The XY stages of the KT series are especially suitable for use in measuring microscopy. Due to the open frame design, the measuring objects can also be captured in transmitted light. Another application of open frame stages is the thickness measurement of flat components, such as wafers, with two oppositely arranged sensors.

The XY stages of the KT series are available in travel ranges of 50 x 50 to 420 x 300 mm.

XY Stage

KT5

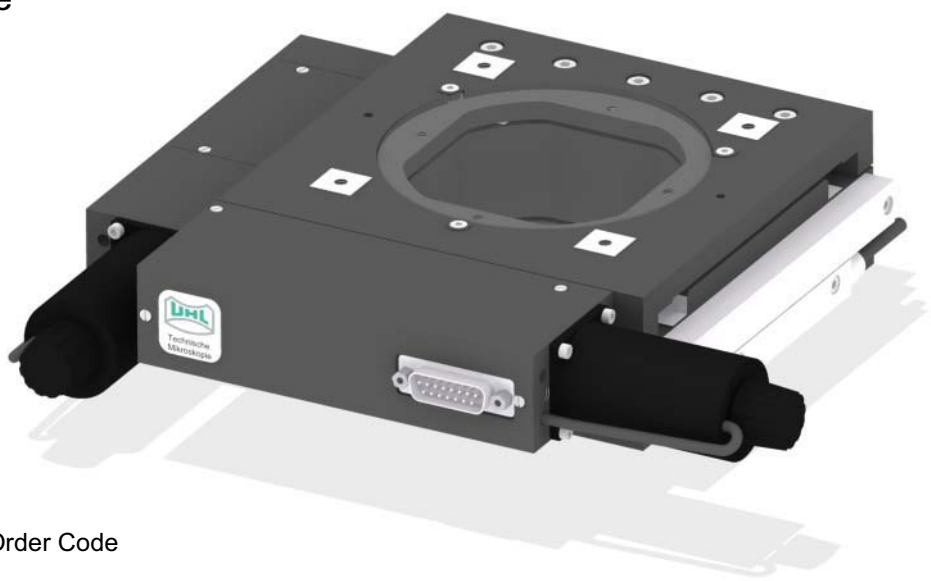

Order Code

KT5-NSMA

Accuracy Class:
A: straightness, flatness: 1 µm
delivery with measuring protocol
C: straightness, flatness: 5 µm

Measuring System:
O: without measuring system
M: linear encoder, 1 Vpp,
20 µm pitch, reference mark at midpoint,
sealed glass scale, positioning accuracy:
2.5 µm + L/200 (L in mm),
delivery with measuring protocol
D: rotary encoder
A: analog micrometer 25 mm
L: digital micrometer 25 mm
5: digital micrometer 50 mm

Motors:
H: manually operated with coarse and fine drive
S: stepper motor Phytron ZSS33.200.1,2
G: DC motor Maxon RE025 24V
M: micrometer (mearuring range 25 mm)
L: linear shaft motor S080

Traveling Range:
N: 50 mm x 50 mm
L: 100 mm x 50 mm

Sample Configurations:

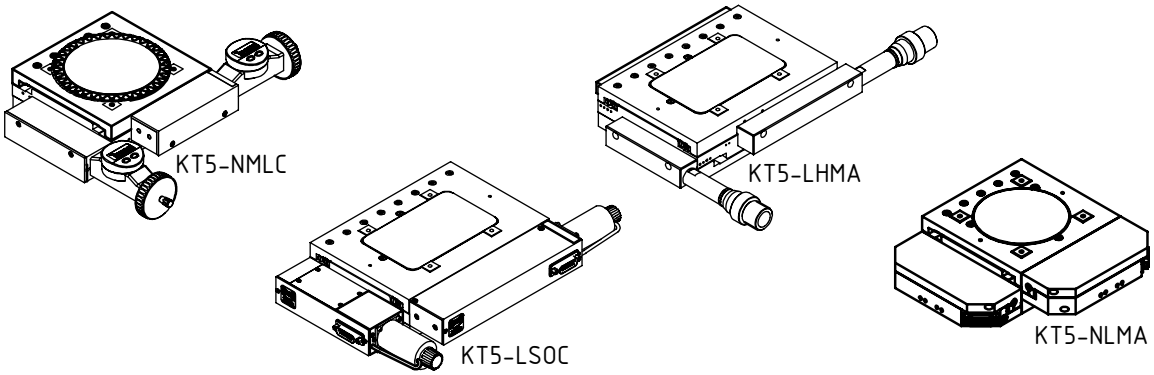

Specifications:

Travel N:	50 mm x 50 mm (25 mm x 25 mm with micrometer)
Travel L:	100 mm x 50 mm
Material:	Stress-relieved aluminum alloy, black anodized
Guiding:	Backlash-free preloaded cross roller guides
Drive S/G:	Backlash-free preloaded ballscrew, pitch 1 mm
Drive L:	Linear shaft motor, peak force 14 N, magn. pitch 30 mm
Weight N:	4 kg
Weight L:	5 kg

Options:
- custom motors
- encoder signal TTL

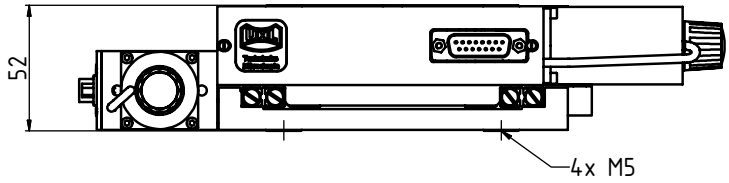

	KT5-Nxxx	KT5-Lxxx
A	145	205

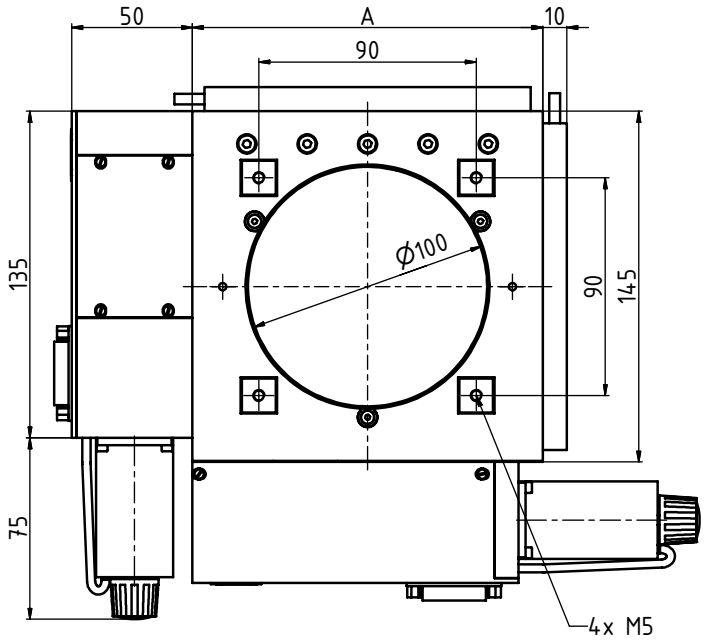

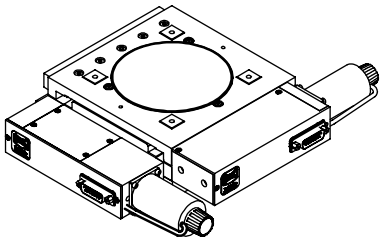

Revision No: 04

XY Stage

KT6

Order Code

KT6-LSOC

Accuracy Class:
A: straightness, flatness: 1 µm
delivery with measuring protocol
C: straightness, flatness: 5 µm

Measuring System:
O: without measuring system
M: linear encoder, 1 Vpp,
20 µm pitch, reference mark at midpoint,
sealed glass scale, positioning accuracy:
2.5 µm + L/200 (L in mm),
delivery with measuring protocol
D: rotary encoder

Motors:
H: manually operated with coarse and fine drive
S: stepper motor Phytron ZSS33.200.1,2
G: DC motor Maxon RE025 24V
L: linear motor

Traveling Range:
N: 100 mm x 100 mm
L: 150 mm x 100 mm
M: 200 mm x 100 mm

Sample Configurations:

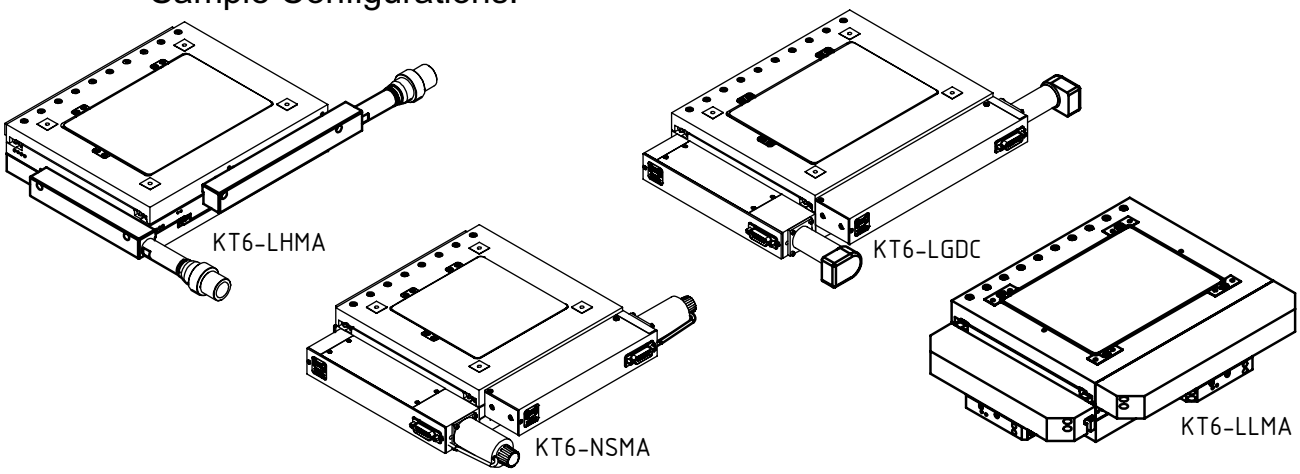

Specifications:

Travel N:	100 mm x 100 mm
Travel L:	150 mm x 100 mm
Travel M:	200 mm x 100 mm
Material:	Stress-relieved aluminum alloy, black anodized
Guiding:	Backlash-free preloaded cross roller guides
Drive:	Backlash-free preloaded ballscrew, pitch 1 mm
Weight N:	7.5 kg
Weight L:	9 kg
Weight M:	11 kg

Options:
- custom motors
- encoder signal TTL

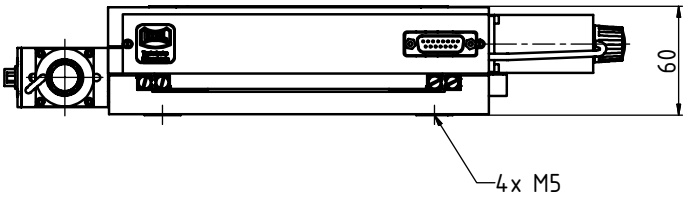

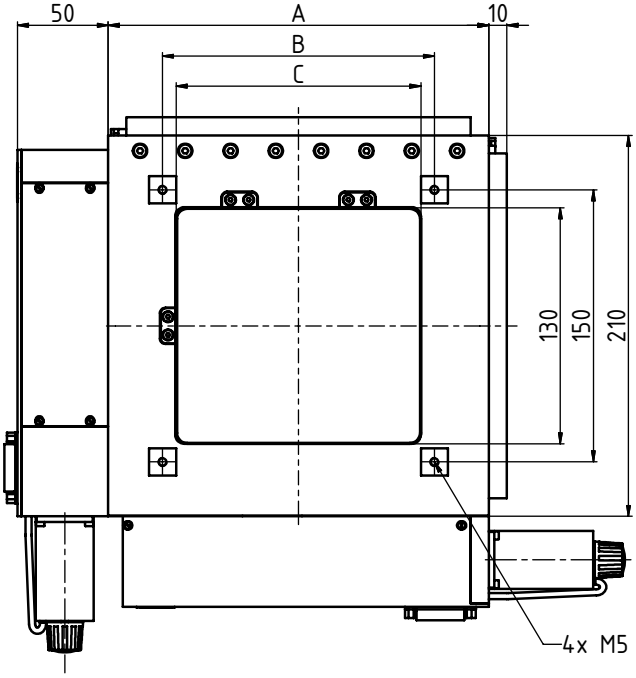

Revision No: 04

	KT6-Nxxx	KT6-Lxxx	KT6-Mxxx
A	210	260	310
B	150	200	200
C	135	185	235

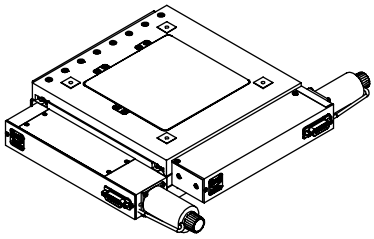

Specifications KT6-LLMx:

Travel L:	150 mm x 100 mm
Material:	Stress-relieved aluminum alloy, black anodized
Guiding:	Backlash-free preloaded cross roller guides
Drive:	Ironless linear motor, 21 mm electrical cycle,peak force 35.7 N
Weight L:	11.5 kg

Options:

- encoder signal TTL

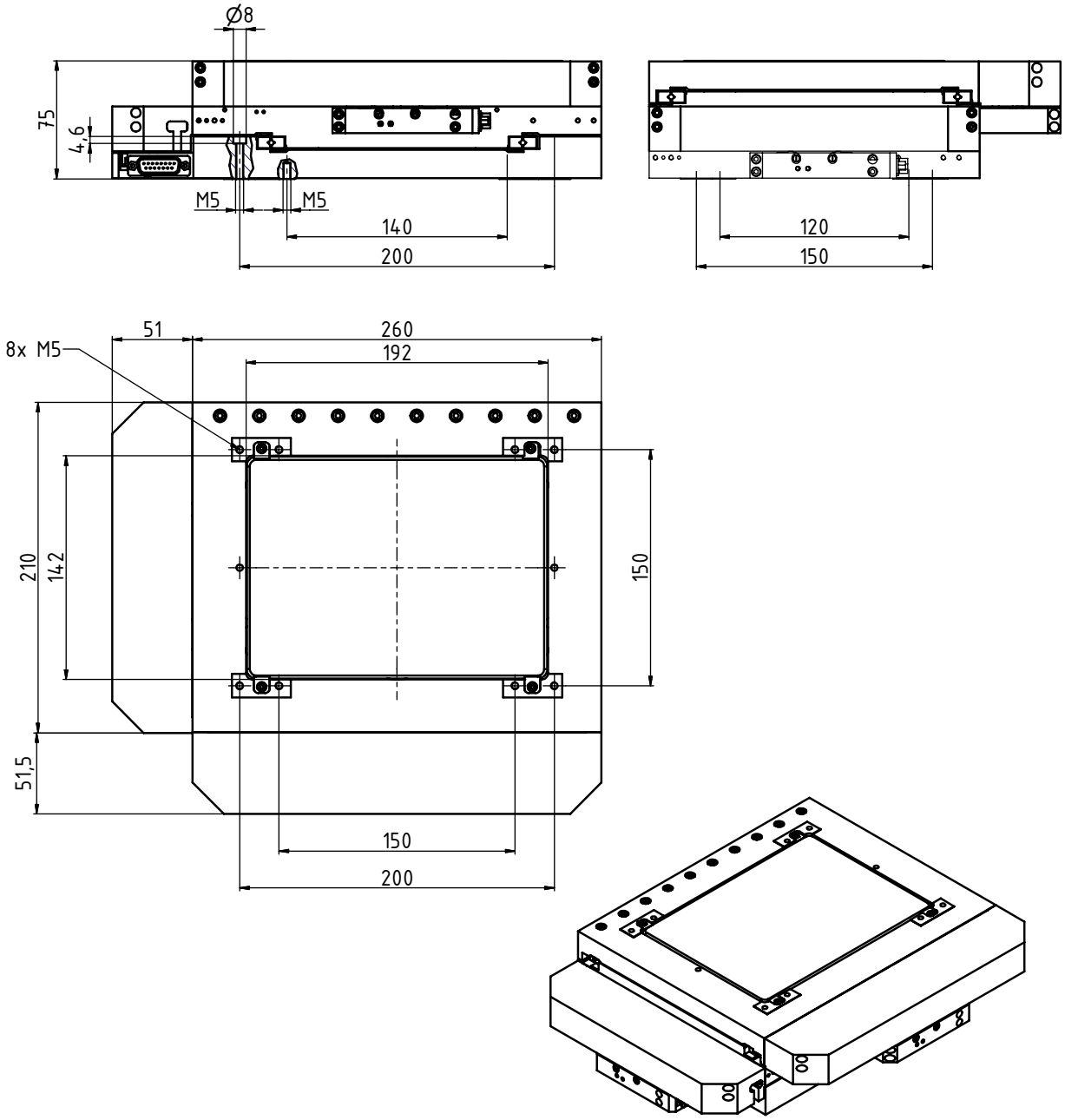

XY Stage

KT6-VM3

Order-Nr.: VM3-602

Specifications

Travel:	150 mm x 100 mm
Material:	Stress-relieved aluminium alloy, black anodized
Guiding:	Backlash-free preloaded cross roller guides
Accuracy	straightness, flatness: 1 µm delivery with measuring protocol
Drive:	Backlash-free fine drive with 0.5 mm pitch in a range of 10 mm and quick release for free movement
Measuring system:	Linear encoder, TTL, 20 µm pitch, reference mark at midpoint, steel scale, positioning accuracy [µm]: 1.8 + L/200 (L in mm), delivery with measuring protocol
Weight:	10 kg

Options:
- encoder signal 1 Vpp

Revision No: 04

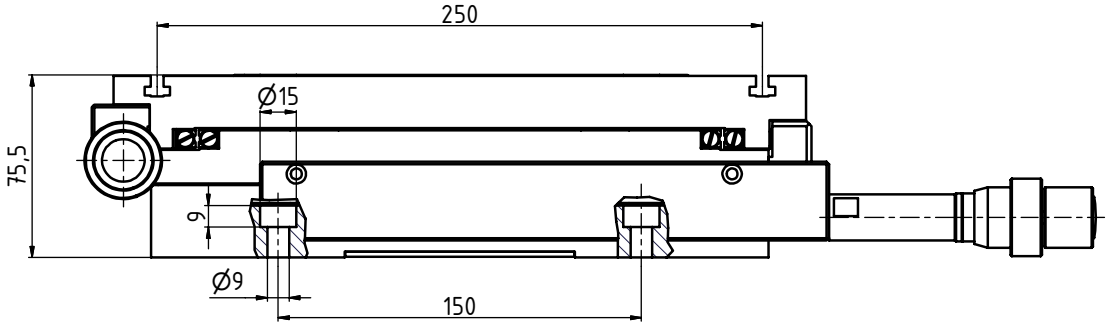
250
Ø15
75,5
9
Ø9
150

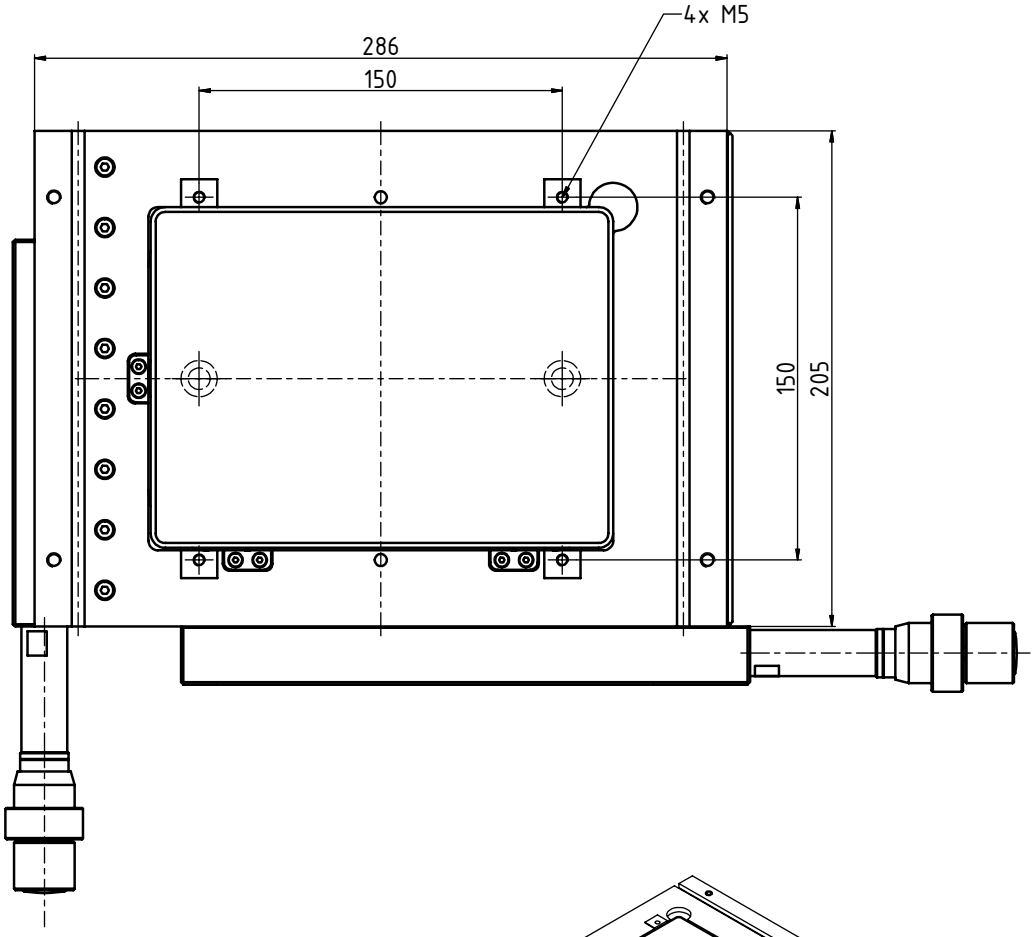
4x M5
286
150
150
205

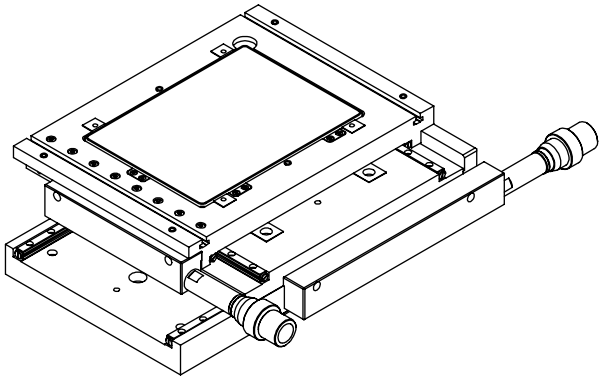

XY Stage

KT6-VM4

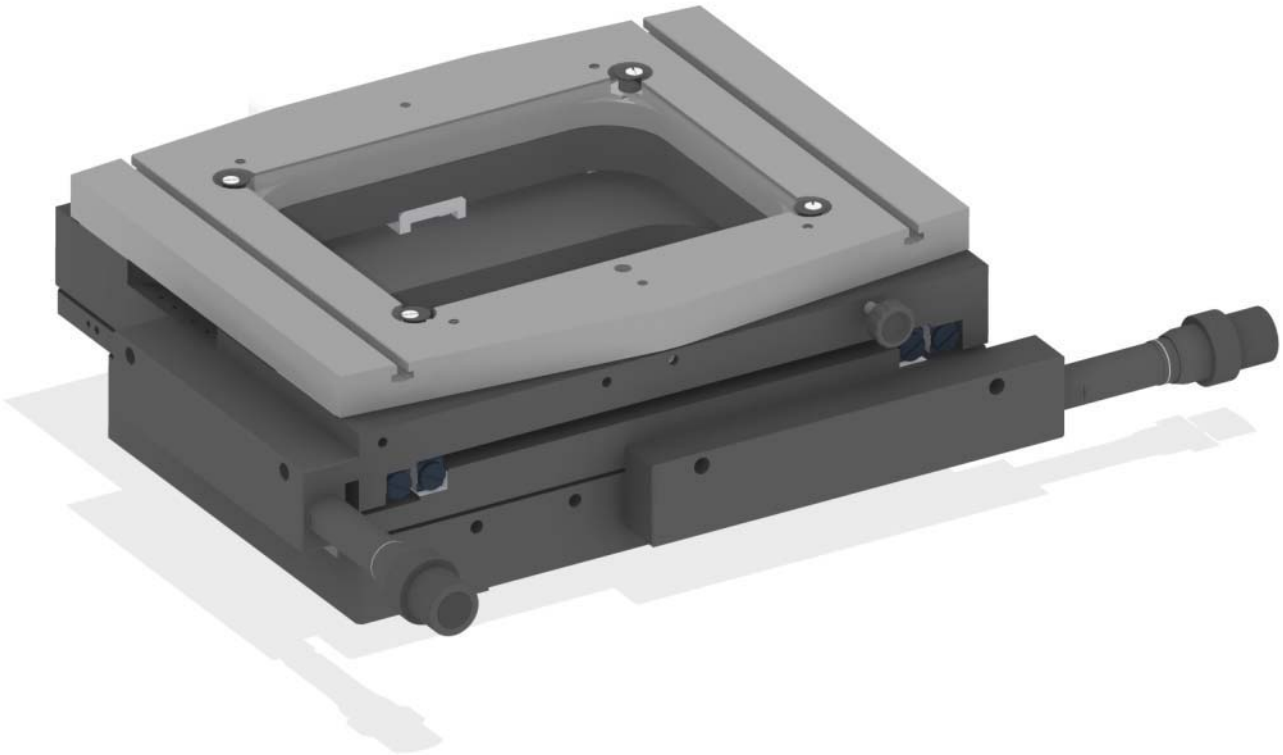

Order-Nr.: VM4-602

Specifications

Travel:	150 mm x 100 mm
Swivelling range:	± 5°
Material:	Stress-relieved aluminium alloy, black anodized
Guiding:	Backlash-free preloaded cross roller guides
Accuracy:	straightness, flatness: 1 µm delivery with measuring protocol
Drive:	Backlash-free fine drive with 0.5 mm pitch in a range of 10 mm and quick release for free movement
Measuring system:	Linear encoder, TTL, 20 µm pitch, reference mark at midpoint, steel scale, positioning accuracy [µm]: 1.8 + L/200 (L in mm), delivery with measuring protocol
Weight:	19 kg

Options:
- encoder signal 1 Vpp

Revision No: 04

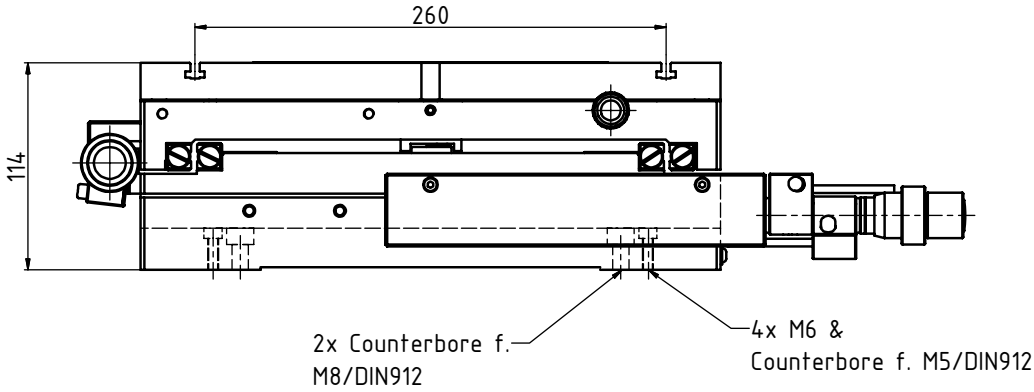
260
114
2x Counterbore f.
M8/DIN912
4x M6 &
Counterbore f. M5/DIN912

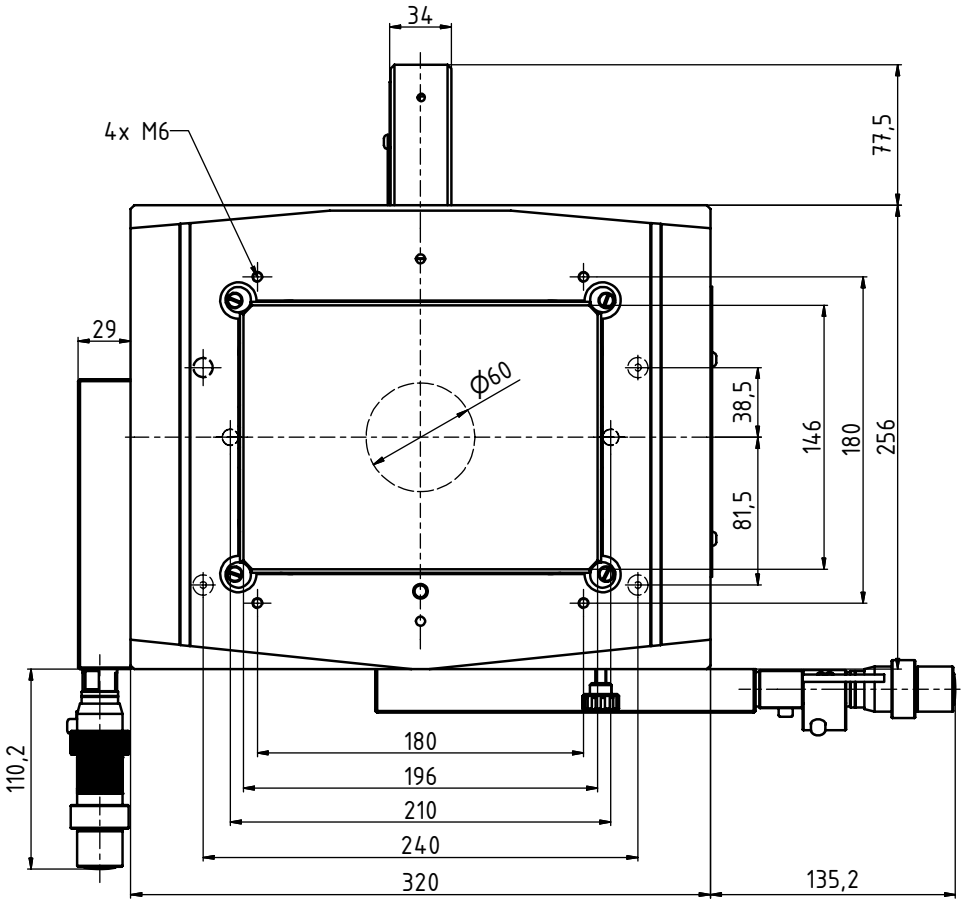
34
4x M6
77,5
29
ϕ60
38,5
146
180
256
81,5
110,2
180
196
210
240
320
135,2

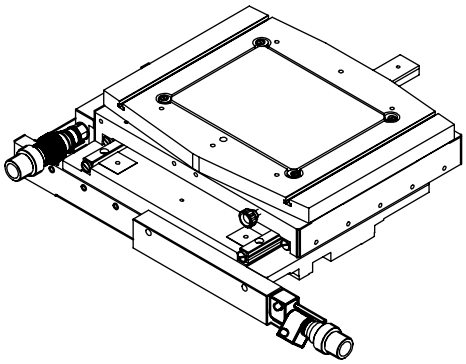

XY Stage

KT7-VM4

Specifications

Travel:	250 mm x 150 mm
Material:	Stress-relieved aluminium alloy, black anodized, top plate hard anodized
Guiding:	Backlash-free preloaded cross roller guides
Accuracy:	straightness, flatness: 1 µm / 100 mm delivery with measuring protocol

Revision No: 04

Order-Nr.: VM4-600

Drive:	Backlash-free fine drive with 0.5 mm pitch in a range of 10 mm and quick release for free movement
Measuring system:	Linear encoder, TTL, 20 µm pitch, reference mark at midpoint, steel scale, positioning accuracy [µm]: 1,8 + L/200 (L in mm), delivery with measuring protocol
Weight:	28 kg

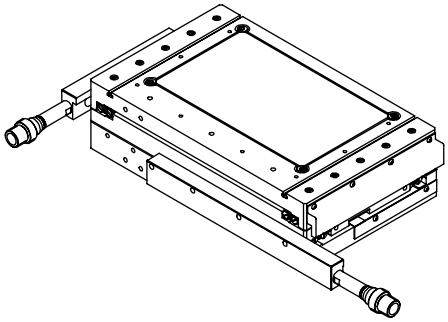

Order-Nr.: VM4-601

Drive:	Backlash-free ball screw with 2 mm pitch, stepper motor Phytron ZSS43.200.2,5
Measuring system:	Linear encoder, TTL, 20 µm pitch, reference mark at midpoint, steel scale, positioning accuracy [µm]: 1,8 + L/200 (L in mm), delivery with measuring protocol
Weight:	30 kg

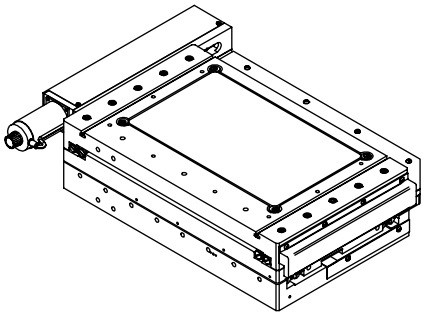

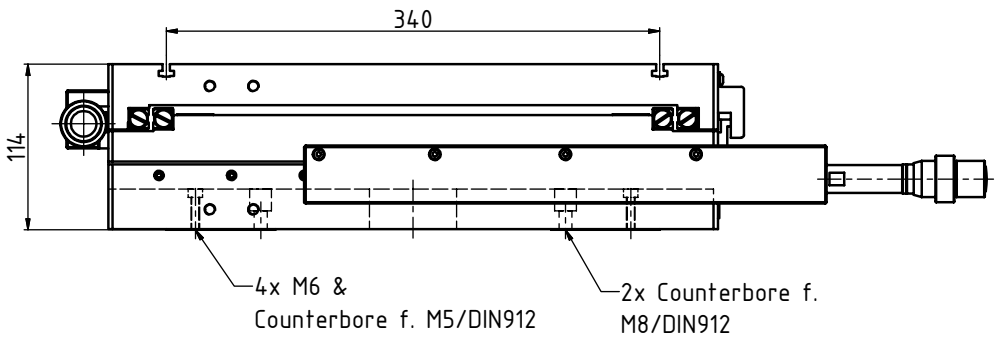
340
114
4x M6 &
Counterbore f. M5/DIN912
2x Counterbore f.
M8/DIN912

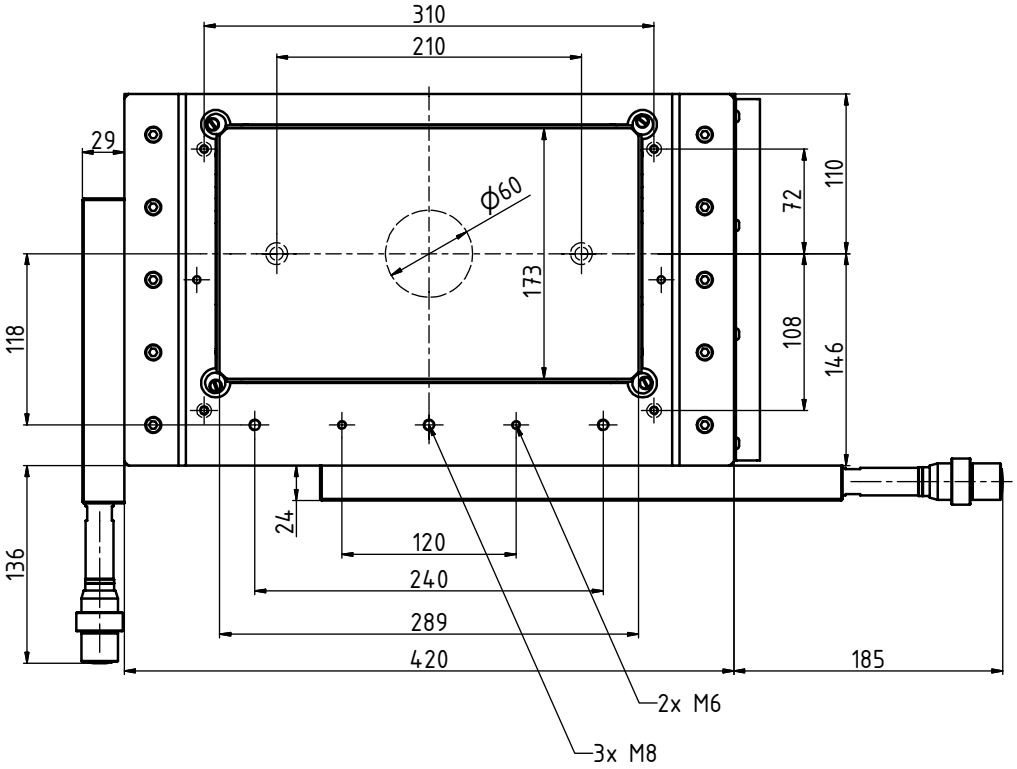
310
210
29
ϕ60
173
72
110
108
146
118
136
24
120
240
289
420
185
2x M6
3x M8

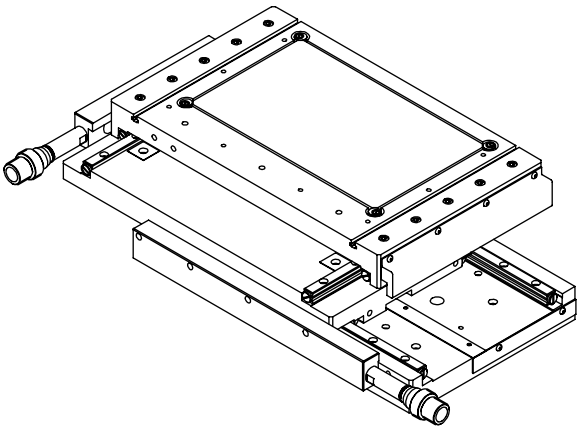

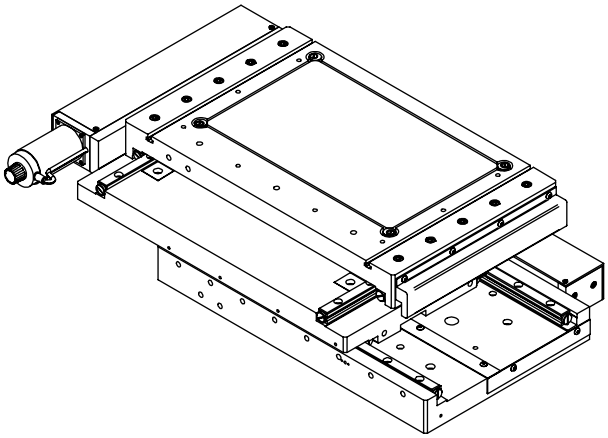

XY Stage

KT7

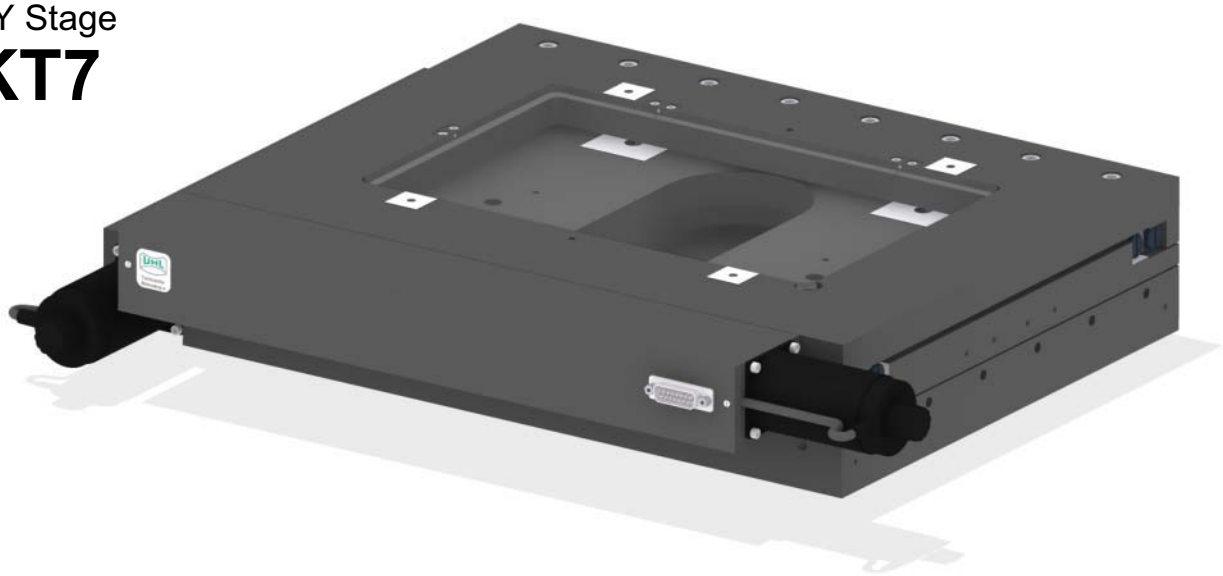

Order Code

KT7-LSOC

Accuracy Class:
A: straightness, flatness: 2 µm
delivery with measuring protocol
C: straightness, flatness: 6 µm

Measuring System:
O: without measuring system
M: linear encoder, 1 Vpp,
20 µm pitch, reference mark at midpoint,
sealed glass scale, positioning accuracy:
2.5 µm + L/200 (L in mm),
delivery with measuring protocol
D: rotary encoder

Motors:
S: stepper motor Phytron ZSS43.200.2,5
G: DC motor Maxon RE035 42V 90W
L: ironless linear motor
H: manually operated with coarse and fine drive

Traveling Range:
N: 150 mm x 150 mm
L: 250 mm x 150 mm

Revision No: 04

Sample Configurations:

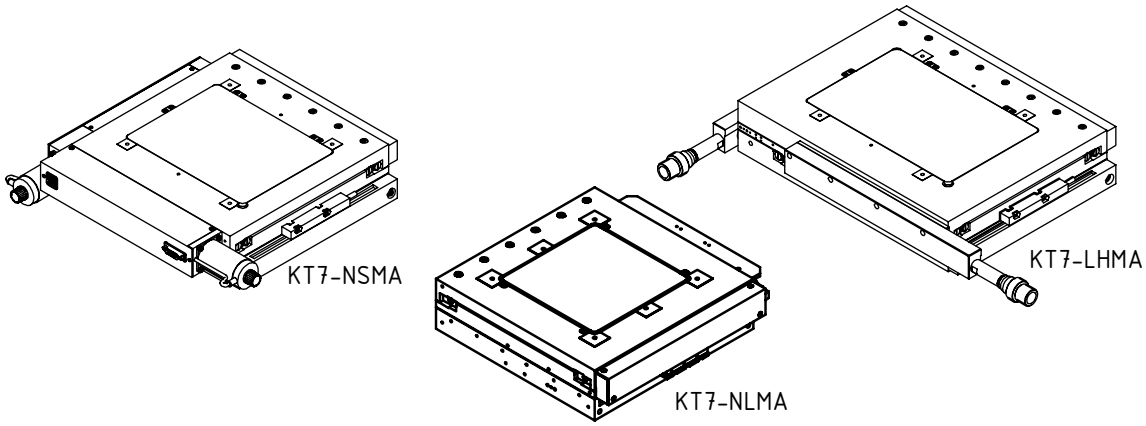

Specifications:

Travel N:	150 mm x 150 mm
Travel L:	250 mm x 150 mm
Material:	Stress-relieved aluminum alloy, black anodized
Guiding:	Backlash-free preloaded cross roller guides
Drive:	Backlash-free preloaded ballscrew, pitch 2 mm
Weight N:	22 kg
Weight L:	27 kg

Options:
- custom motors
- encoder signal TTL

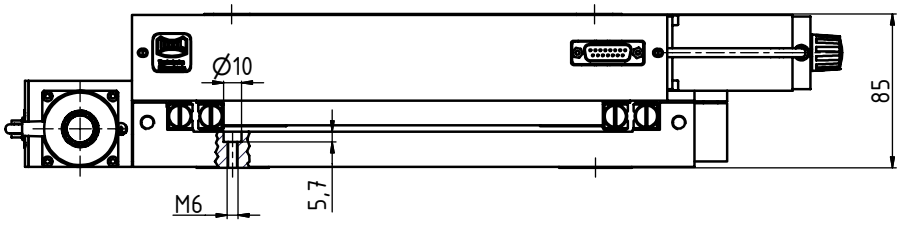

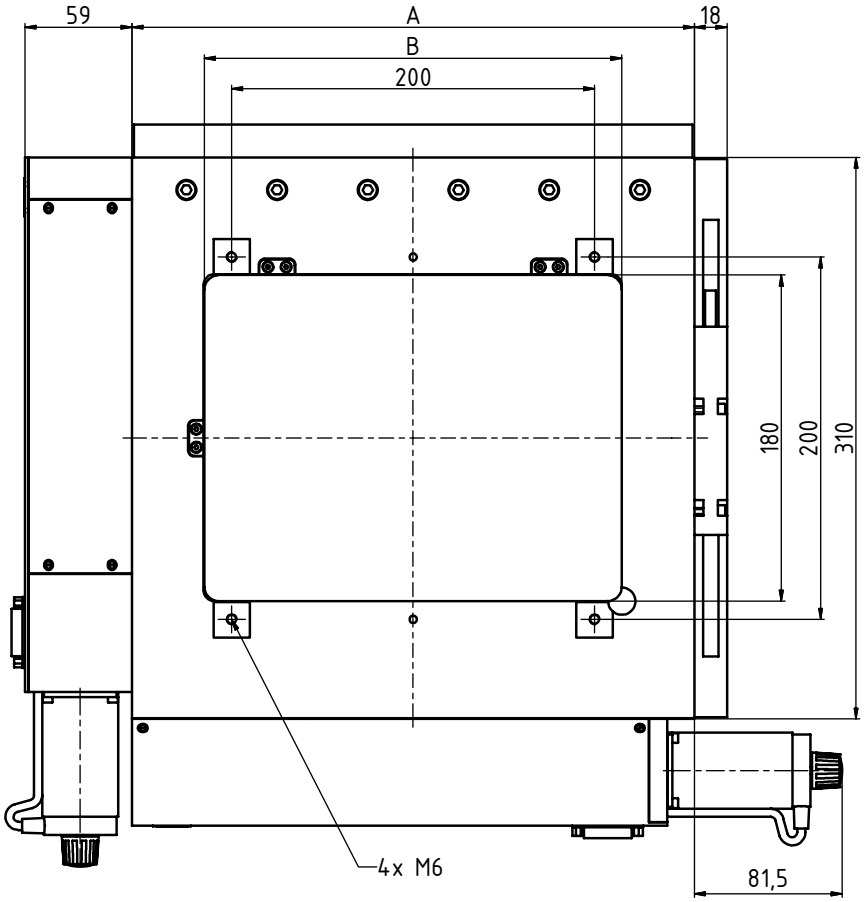

	KT7-Nxxx	KT7-Lxxx
A	310	410
B	230	280

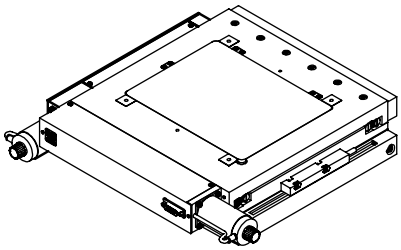

XY Stage

KT8

Order Code

KT8-NSMA

Accuracy Class:
- A: straightness, flatness: 1 µm / 100 mm delivery with measuring protocol
- C: straightness, flatness: 3 µm / 100 mm

Measuring System:
- O: without measuring system
- M: linear encoder, 1 Vpp, 20 µm pitch, reference mark at midpoint, sealed glass scale, positioning accuracy: 2.5 µm + L/200 (L in mm), delivery with measuring protocol
- D: rotary encoder

Motors:
- S: stepper motor Phytron ZSS43.200.2,5
- G: DC motor Maxon RE035 42V 90W
- L: ironless linear motor
- H: manually operated with coarse and fine drive

Traveling Range:
- N: 250 mm x 200 mm
- L: 350 mm x 200 mm

Revision No: 04

Sample Configurations:

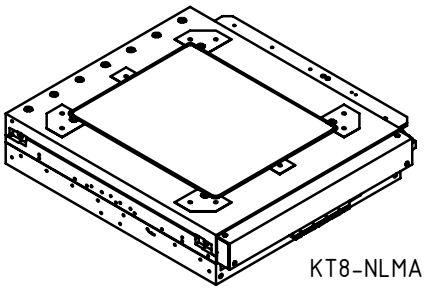

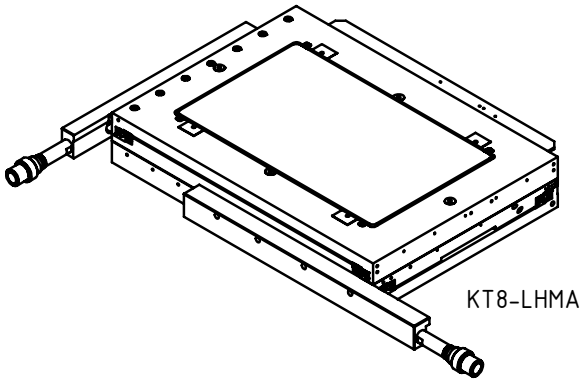

Specifications:

Travel N:	250 mm x 200 mm
Travel L:	350 mm x 200 mm
Material:	Stress-relieved aluminum alloy, black anodized
Guiding:	Backlash-free preloaded cross roller guides
Drive:	Backlash-free preloaded ballscrew, pitch 2 mm
Weight N:	31 kg
Weight L:	39 kg

Options:
- custom motors
- encoder signal TTL

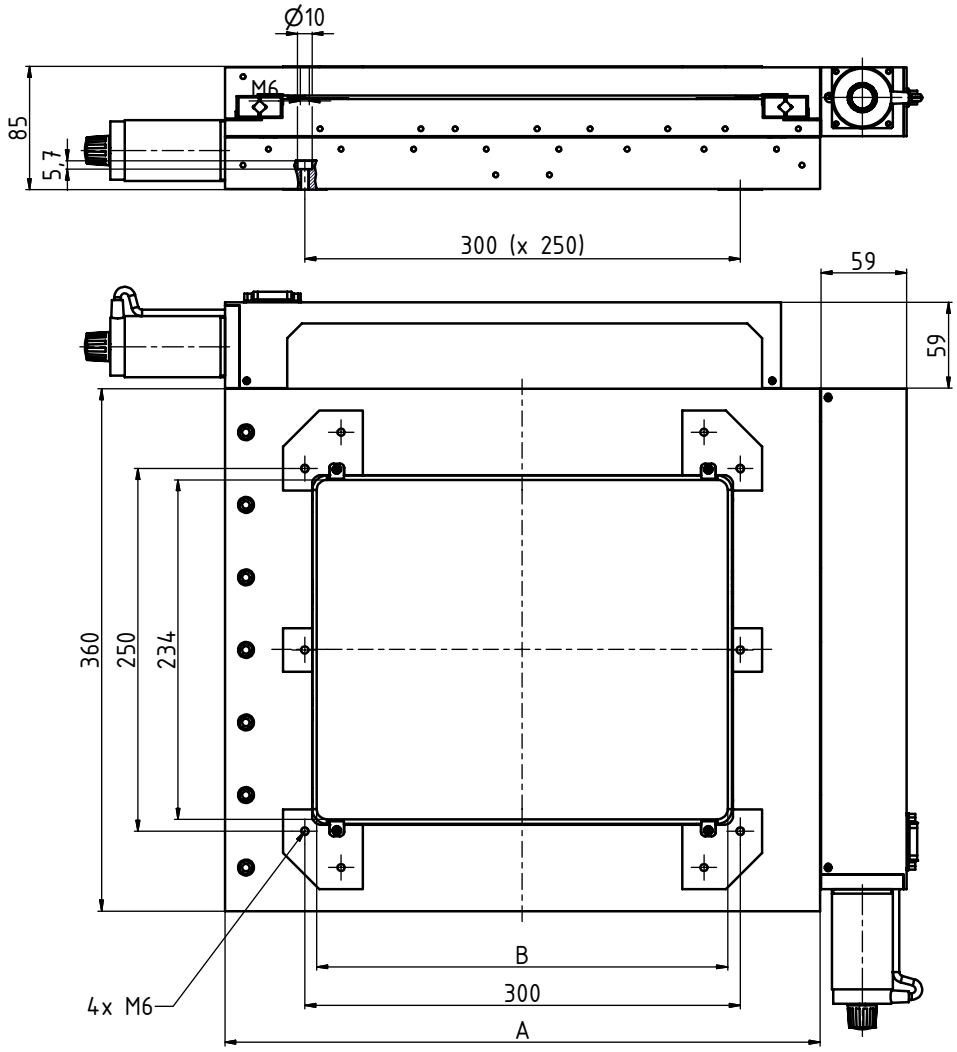

	KT8-Nxxx	KT8-Lxxx
A	410	510
B	283	383

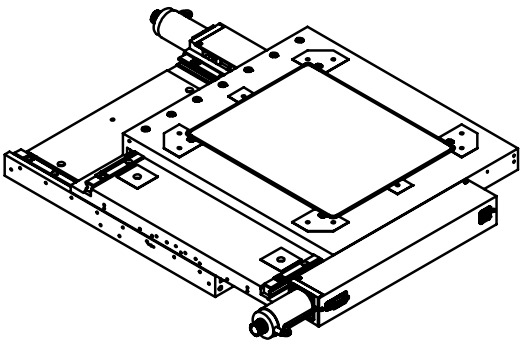

XY Stage

KT9

Order Code

KT9-LSMA

Accuracy Class:
A: straightness, flatness: 1 µm / 100 mm
delivery with measuring protocol
C: straightness, flatness: 3 µm / 100 mm

Measuring System:
O: without measuring system
M: linear encoder, 1 Vpp,
20 µm pitch, reference mark at midpoint,
positioning accuracy:
2.5 µm + L/200 (L in mm),
delivery with measuring protocol
D: rotary encoder

Motors:
S: stepper motor Phytron ZSS43.200.2,5
G: DC motor Maxon RE035 42V 90W
L: ironless linear motor
H: manually operated with coarse and fine drive

Traveling Range:
N: 350 mm x 300 mm
L: 420 mm x 300 mm
M: 460 mm x 300 mm

Revision No: 04

Sample Configurations:

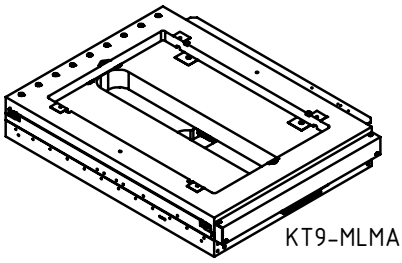

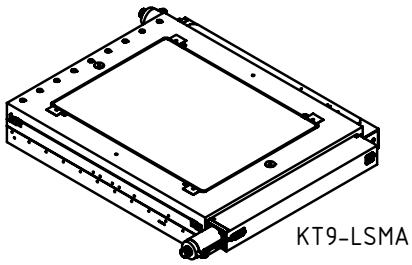

Specifications:

Travel N:	350 mm x 300 mm
Travel L:	420 mm x 300 mm
Travel M:	460 mm x 300 mm
Material:	Stress-relieved aluminum alloy, black anodized
Guiding:	Backlash-free preloaded cross roller guides
Drive:	Backlash-free preloaded ballscrew, pitch 2 mm
Weight N:	51 kg
Weight L:	59 kg
Weight M:	64 kg

Options:
- custom motors
- encoder signal TTL

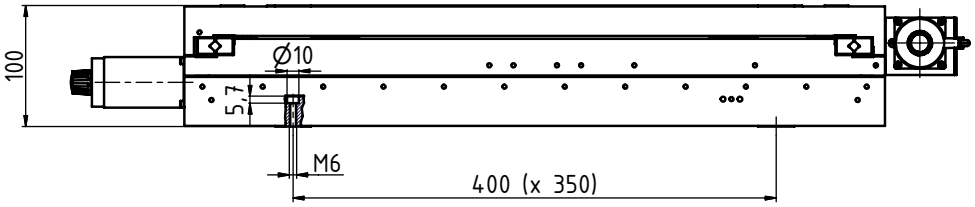

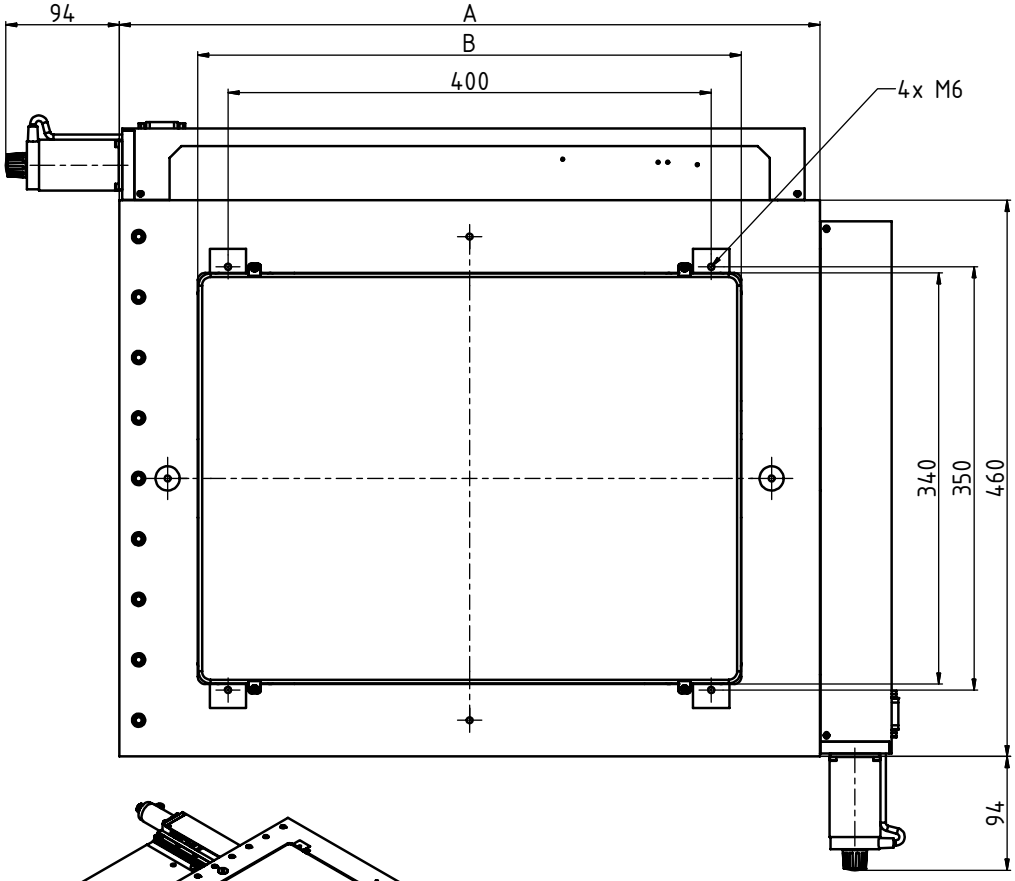

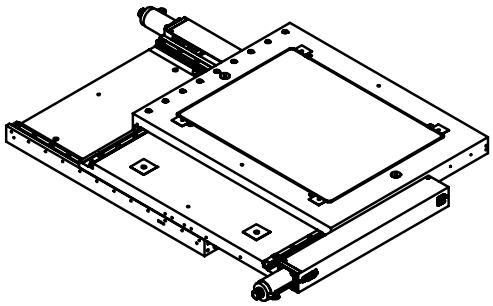

	KT9-Nxxx	KT9-Lxxx	KT9-Mxxx
A	510	580	610
B	380	450	490

XY Stage

KTX

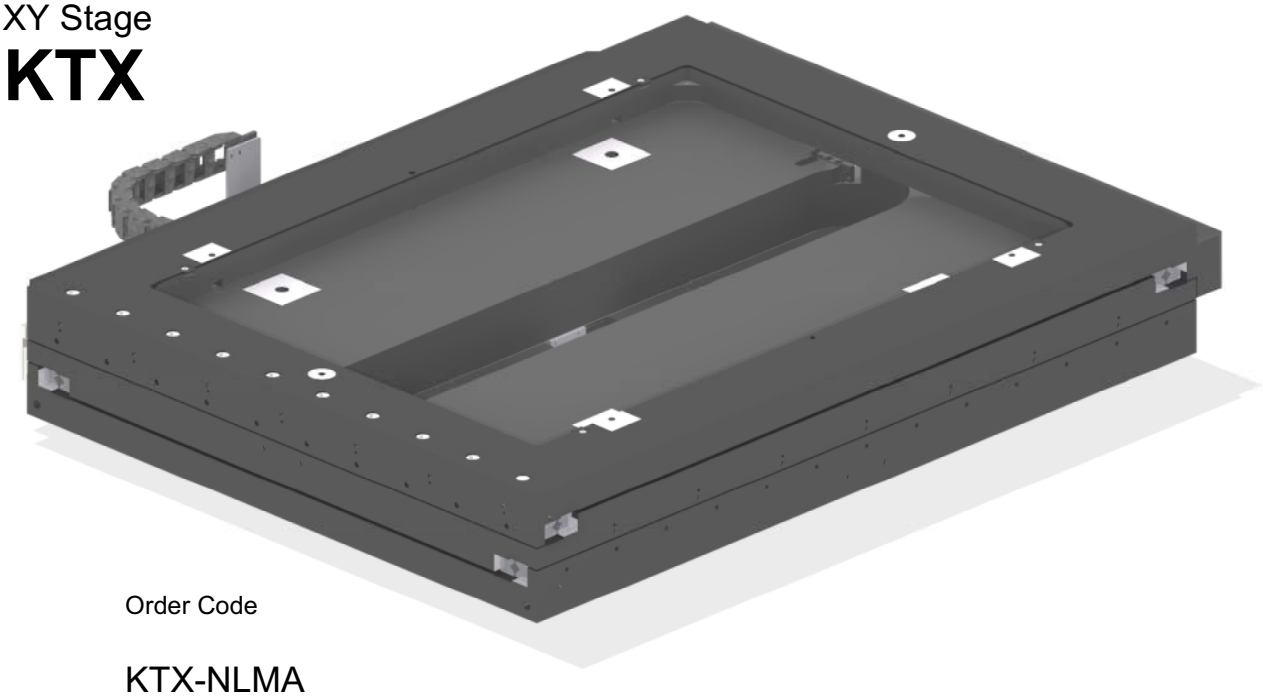

Order Code

KTX-NLMA

Accuracy Class:
- A: straightness, flatness: 1.5 µm / 100 mm delivery with measuring protocol
- C: straightness, flatness: 3 µm / 100 mm

Measuring System:
- O: without measuring system
- M: linear encoder, 1 Vpp, 20 µm pitch, reference mark at midpoint, positioning accuracy: 2.5 µm + L/200 (L in mm), delivery with measuring protocol
- D: rotary encoder

Motors:
- S: stepper motor Phytron ZSS43.200.2,5
- G: DC motor Maxon RE035 42V 90W
- L: ironless linear motor
- H: manually operated with coarse and fine drive

Traveling Range:
- N: 500 mm x 350 mm

Revision No: 04

Sample Configurations:

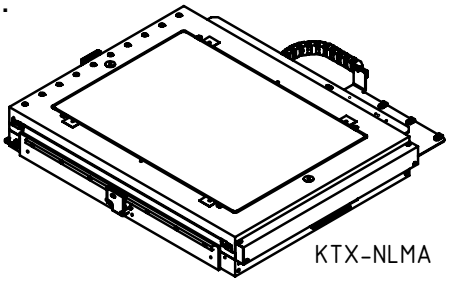

Specifications:

Travel M:	500 mm x 350 mm
Material:	Stress-relieved aluminum alloy, black anodized
Guiding:	Backlash-free preloaded cross roller guides
Drive S/G:	Backlash-free preloaded ballscrew, pitch 2 mm
Drive L:	Ironless linear motor, peak force 113.5 N, pole pitch 30 mm
Weight N:	71 kg

Options:
- custom motors
- encoder signal TTL

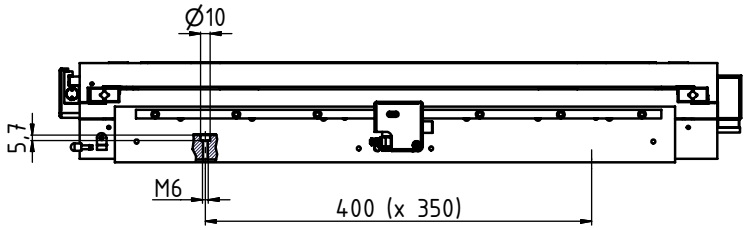

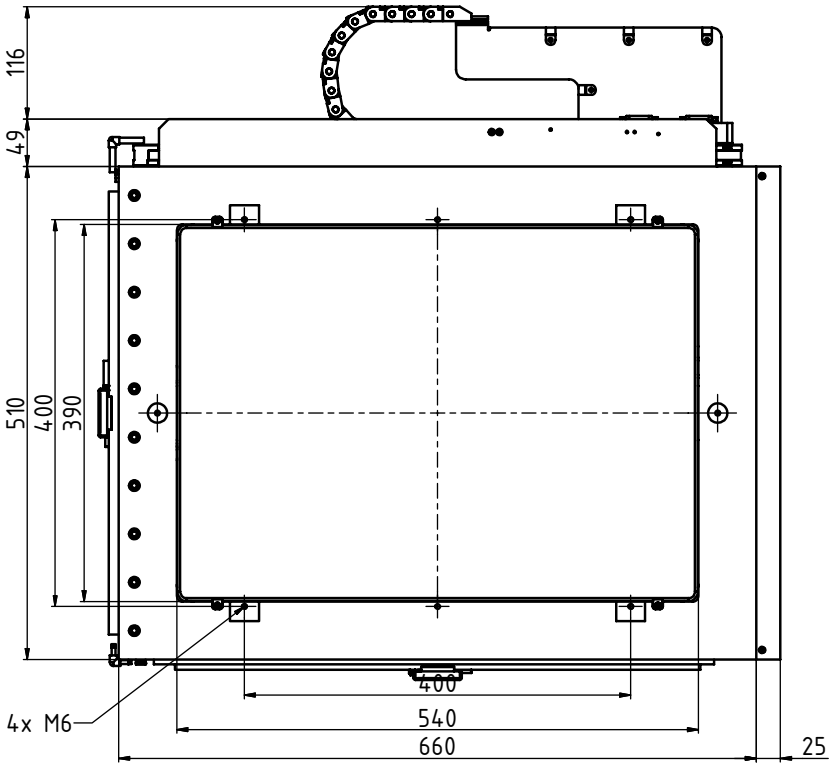

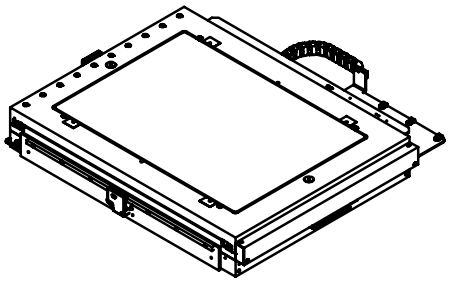

Application example

Prototype of confocal microscope

Walter Uhl
technische Mikroskope GmbH & Co. KG
Loherstrasse 7
D-35614 Asslar
Telefon: ++49 (0) 6441 8 86 03
Telefax: ++49 (0) 6441 8 57 18
email: walteruhl@t-online.de
Internet: www.walteruhl.com

Revision No: 04

XY Stages

GT Series

Revision No: 04

The XY stages of the GT series were specially developed for applications in surface metrology. Due to the compact design and the use of selected cross roller bearings as well as special grinded ballscrews highest requirements of accuracy and noise are achieved.

The XY stages of the GT series are available in travel ranges of 50 x 50 to 350 x 350 mm.

XY Stage

GT5

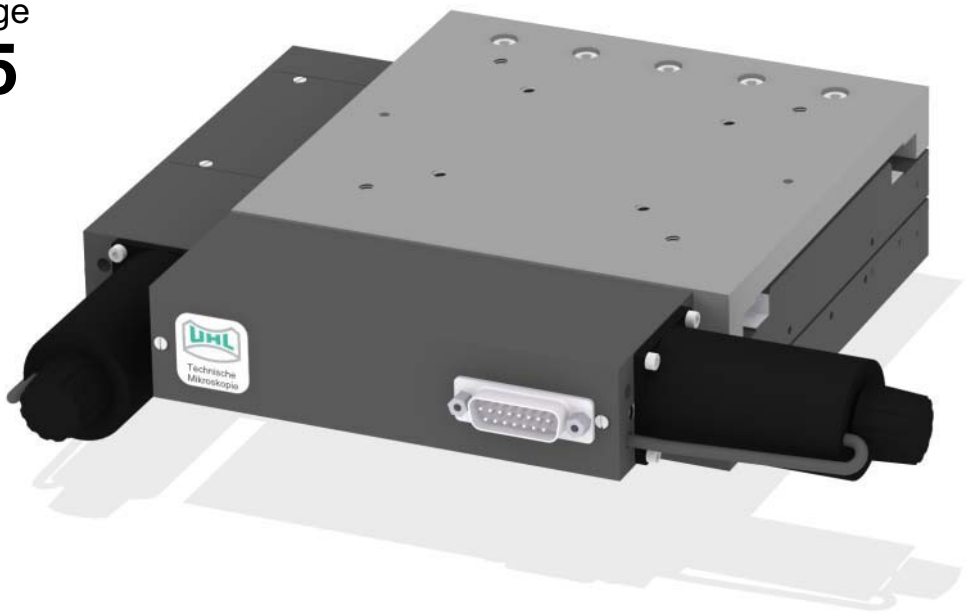

Order Code

GT5-NSOC

Accuracy Class:
A: straightness, flatness: 1 µm
delivery with measuring protocol
C: straightness, flatness: 5 µm

Measuring System:
O: without measuring system
M: linear encoder, 1 Vpp,
20 µm pitch, reference mark at midpoint,
sealed glass scale, positioning accuracy:
2.5 µm + L/200 (L in mm),
delivery with measuring protocol
D: rotary encoder

Motors:
S: stepper motor Phytron ZSS33.200.1,2
G: DC motor Maxon RE025 24V
L: linear shaft motor

Traveling Range:
N: 50 mm x 50 mm
L: 100 mm x 50 mm

Sample Configurations:

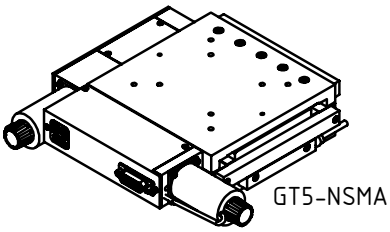

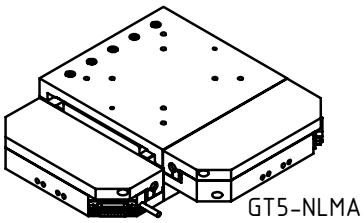

Specifications:

Travel N:	50 mm x 50 mm
Travel L:	100 mm x 50 mm
Material:	Stress-relieved aluminum alloy, black anodized, top plate hard anodized
Guiding:	Backlash-free preloaded cross roller guides
Drive S/G:	Backlash-free preloaded ballscrew, pitch 1 mm
Drive L:	Linear shaft motor, peak force 14 N, magn. pitch 30 mm
Weight N:	4 kg
Weight L:	5 kg

Options:
- custom motors
- encoder signal TTL

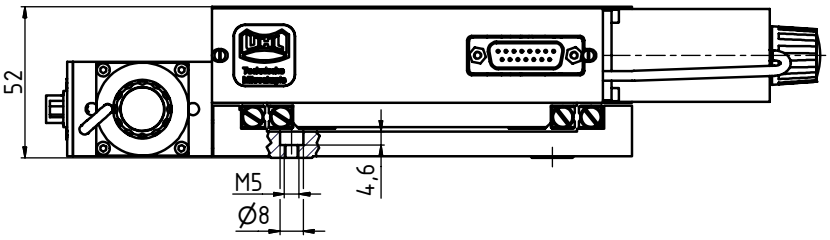

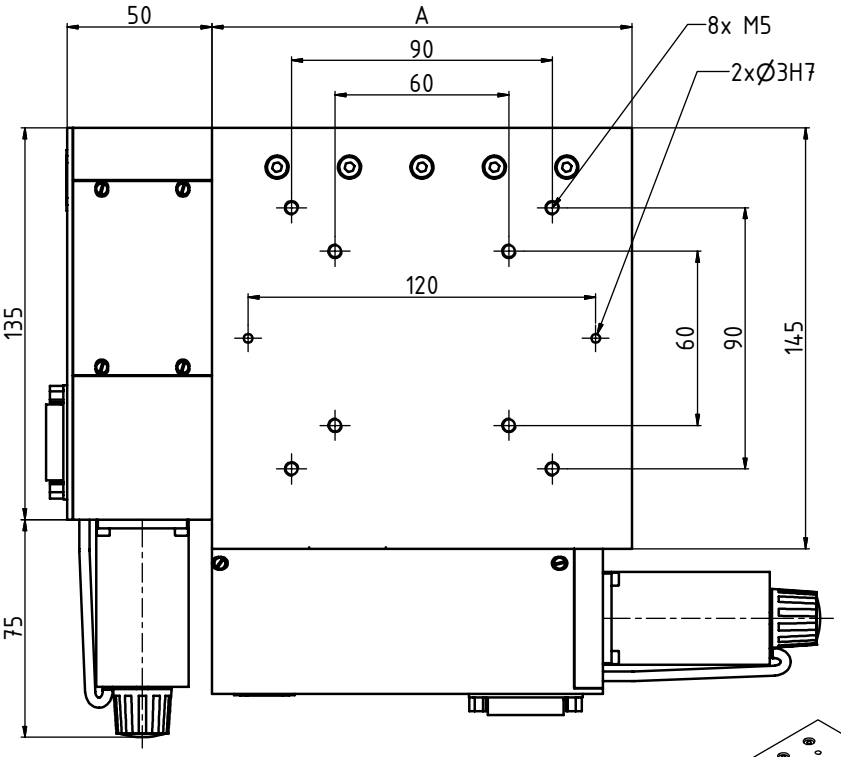

	GT5-Nxxx	GT5-Lxxx
A	145	205

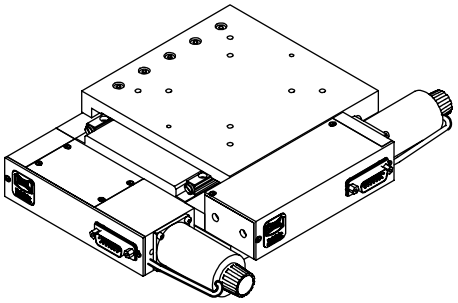

Revision No: 04

XY Stage

GT6

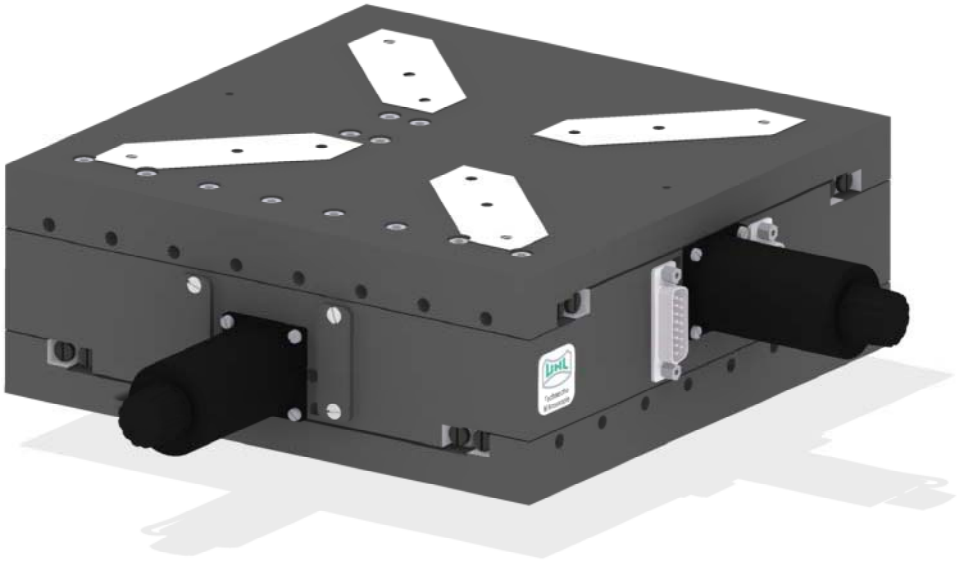

Order Code

GT6-NSOC

Accuracy Class:
A: straightness, flatness: 1 µm
delivery with measuring protocol
C: straightness, flatness: 5 µm

Measuring System:
O: without measuring system
M: linear encoder, 1 Vpp,
20 µm pitch, reference mark at midpoint,
steel scale, positioning accuracy:
1 µm + L/200 (L in mm),
delivery with measuring protocol
D: rotary encoder

Motors:
S: stepper motor Phytron ZSS33.200.1,2
G: DC motor Maxon RE025 24V
L: ironless linear motor

Traveling Range:
N: 100 mm x 100 mm

Sample Configurations:

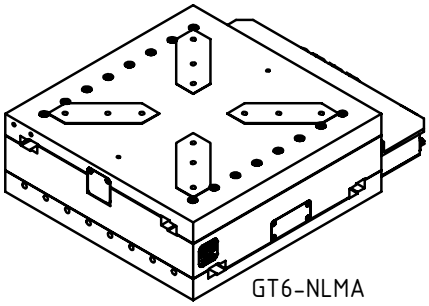

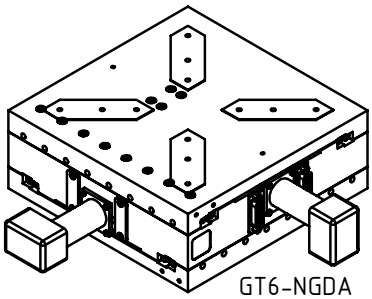

Specifications:

Travel:	100 mm x 100 mm
Material:	Stress-relieved aluminum alloy, black anodized
Guiding:	Backlash-free preloaded cross roller guides
Drive S/G:	Backlash-free preloaded ballscrew, pitch 2 mm
Drive L:	Ironless linear motor, peak force 35.7 N, magn. pitch 21 mm
Weight:	9 kg

Options:
- custom motors
- linear encoder with 2 or 4 µm pitch, glass scale
- encoder signal TTL
- ballscrew, pitch 1 mm

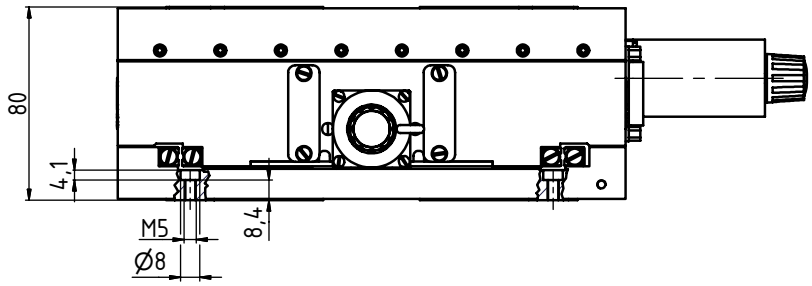

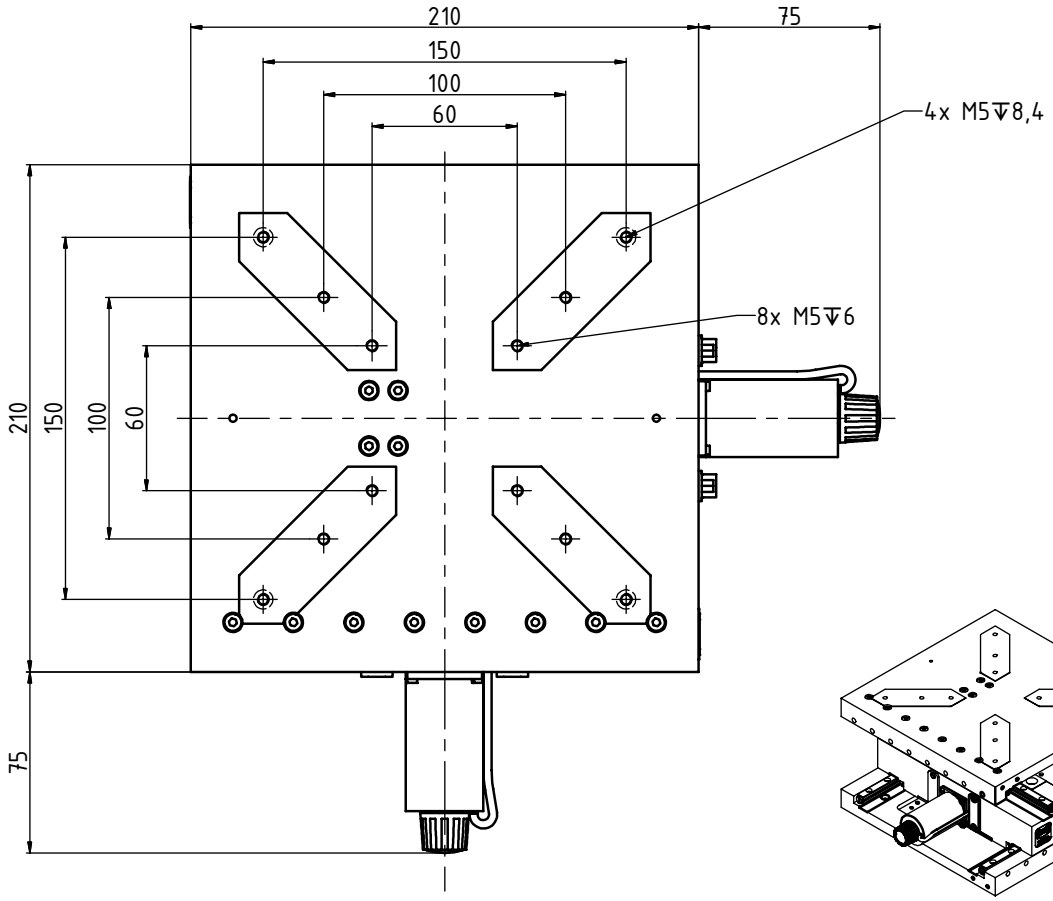

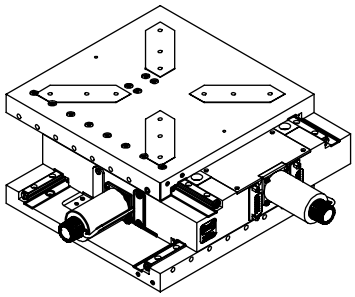

Revision No: 04

XY Stage

GT8

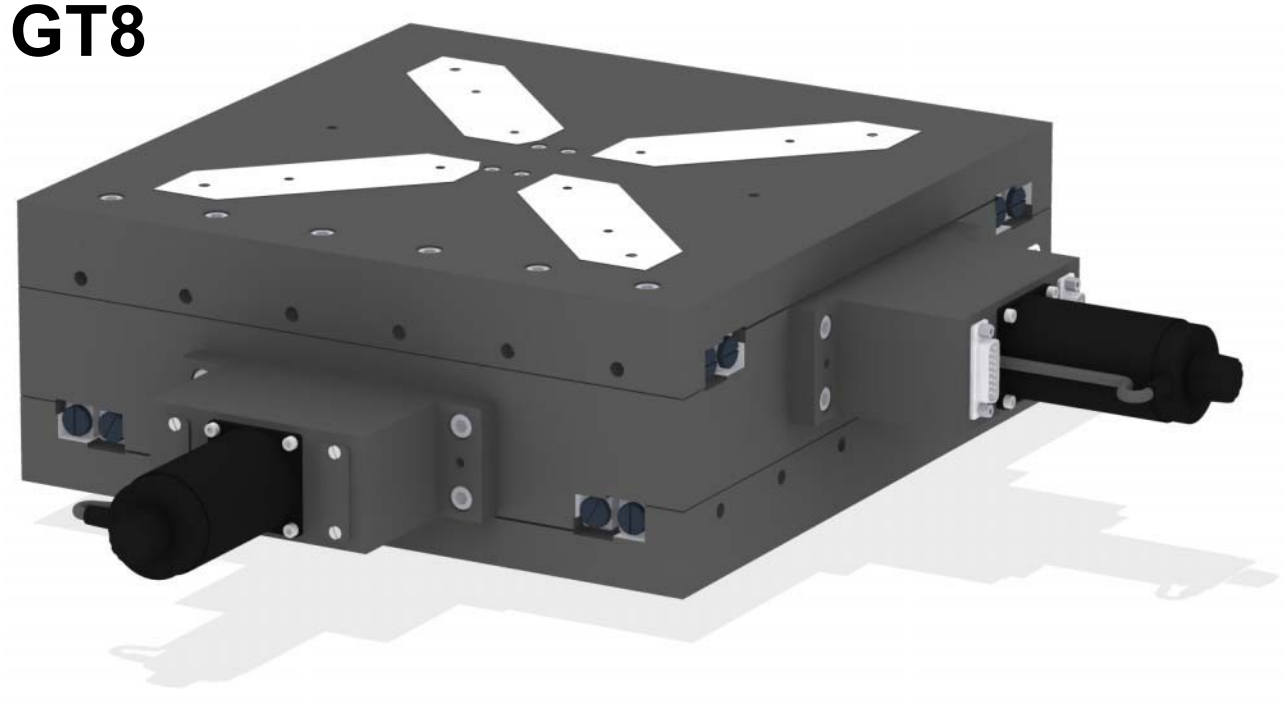

Order Code

GT8-NSOC

Accuracy Class:
A: straightness, flatness: 2 µm
delivery with measuring protocol
C: straightness, flatness: 6 µm

Measuring System:
O: without measuring system
M: linear encoder, 1 Vpp,
20 µm pitch, reference mark at midpoint,
steel scale, positioning accuracy:
1.5 µm + L/200 (L in mm),
delivery with measuring protocol
D: rotary encoder

Motors:
S: stepper motor Phytron ZSS43.200.2,5
G: DC motor Maxon RE035 42V 90W
L: ironless linear motor

Traveling Range:
N: 200 mm x 200 mm

Specifications:

Travel:	200 mm x 200 mm
Material:	Stress-relieved aluminum alloy, black anodized
Guiding:	Backlash-free preloaded cross roller guides
Drive:	Backlash-free preloaded ballscrew, pitch 4 mm
Weight:	30 kg

Options:

- custom motors
- linear encoder with 2 or 4 µm pitch, glass scale
- encoder signal TTL
- ballscrew, pitch 2 mm

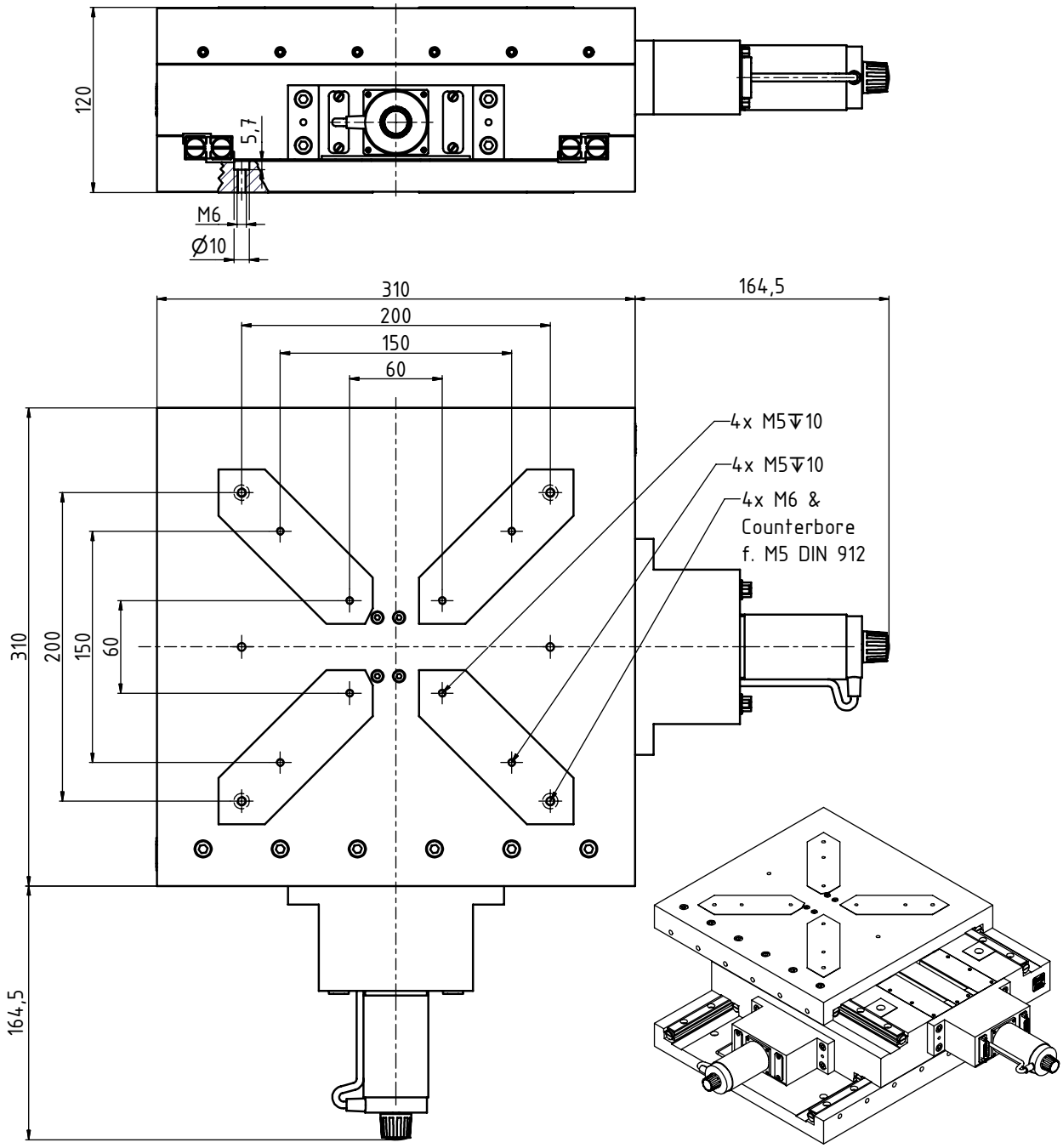

Revision No: 04

XY Stage

GT9

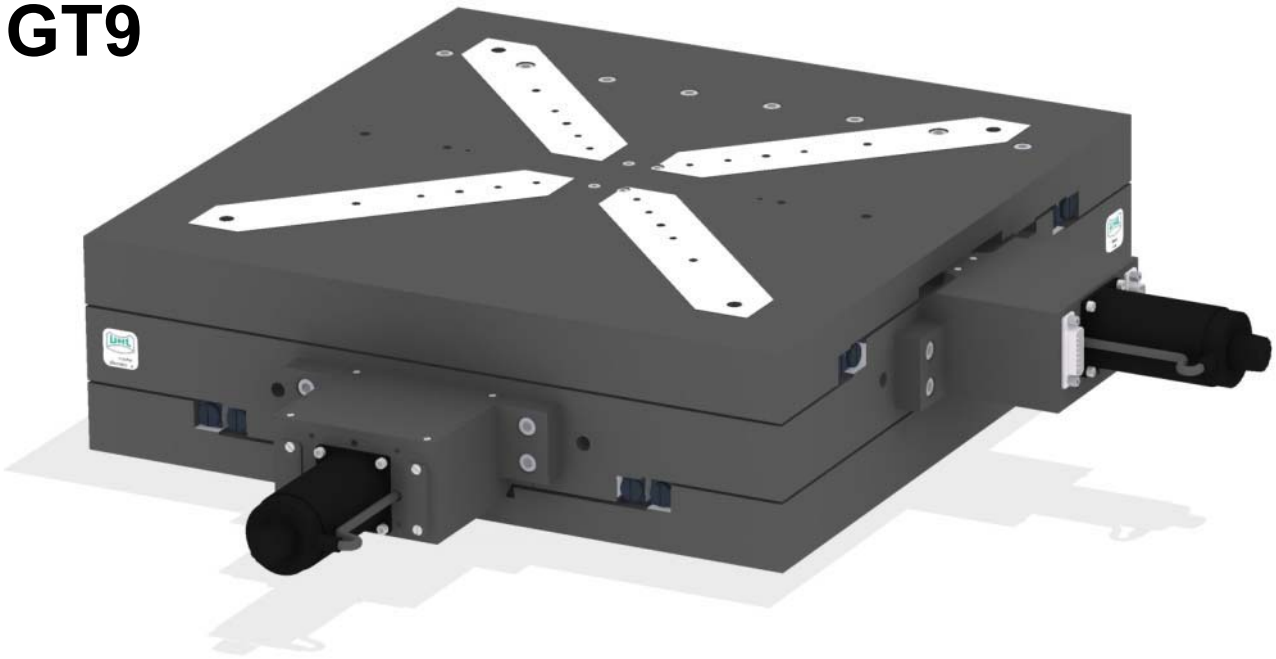

Order Code

GT9-NSOC

Accuracy Class:
A: straightness, flatness: 1 µm / 100 mm
delivery with measuring protocol
C: straightness, flatness: 3 µm / 100 mm

Measuring System:
O: without measuring system
M: linear encoder, 1 Vpp,
20 µm pitch, reference mark at midpoint,
steel scale, positioning accuracy:
2.5 µm + L/200 (L in mm),
delivery with measuring protocol
D: rotary encoder

Motors:
S: stepper motor Phytron ZSS43.200.2,5
G: DC motor Maxon RE035 42V 90W

Traveling Range:
N: 300 mm x 300 mm
L: 350 mm x 350 mm

Specifications:

Travel N:	300 mm x 300 mm
Travel L:	350 mm x 350 mm
Material:	Stress-relieved aluminum alloy, black anodized
Guiding:	Backlash-free preloaded cross roller guides
Drive:	Backlash-free preloaded ballscrew, pitch 4 mm
Weight N:	50 kg
Weight L:	65 kg

Options:

- custom motors
- linear encoder with 2 or 4 µm pitch, glass scale
- encoder signal TTL
- ballscrew, pitch 2 mm

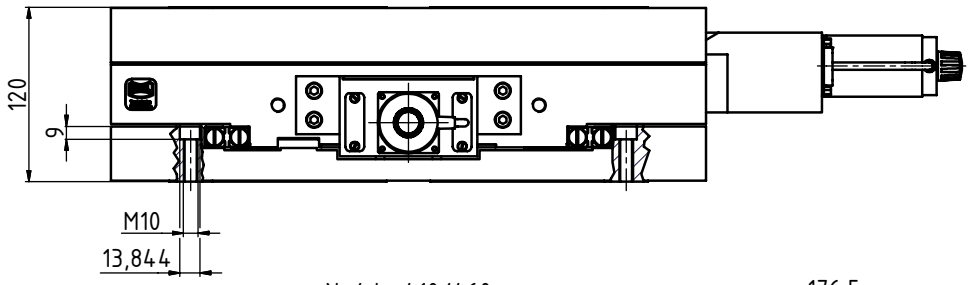

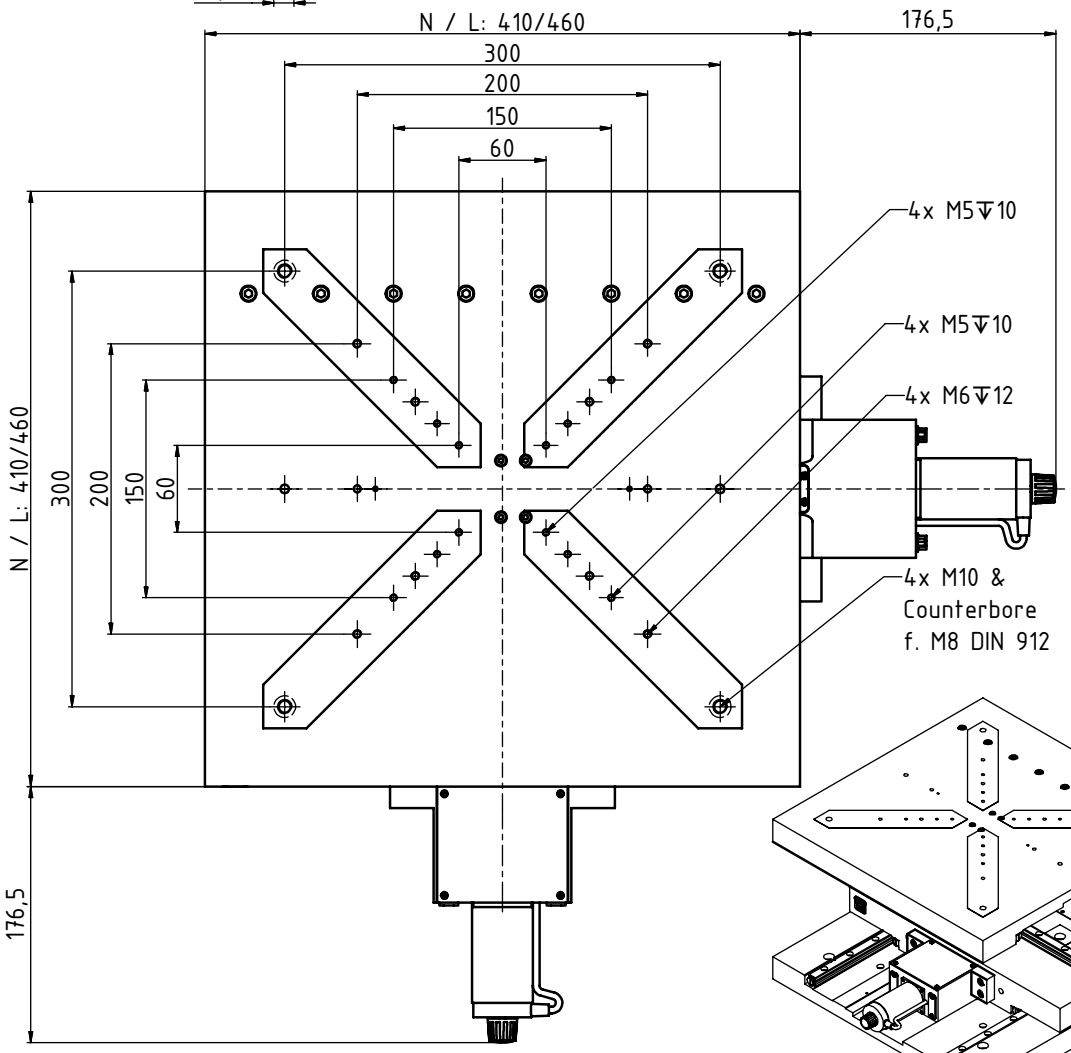

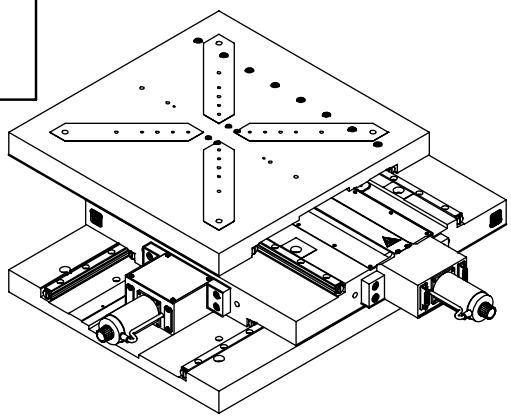

Revision No: 04

Application example

Positioning system for measuring surface topography

Walter Uhl
technische Mikroskope GmbH & Co. KG
Loherstrasse 7
D-35614 Asslar
Telefon: ++49 (0) 6441 8 86 03
Telefax: ++49 (0) 6441 8 57 18
email: walteruhl@t-online.de
Internet: www.walteruhl.com

3. Rotary Stages

RT Series

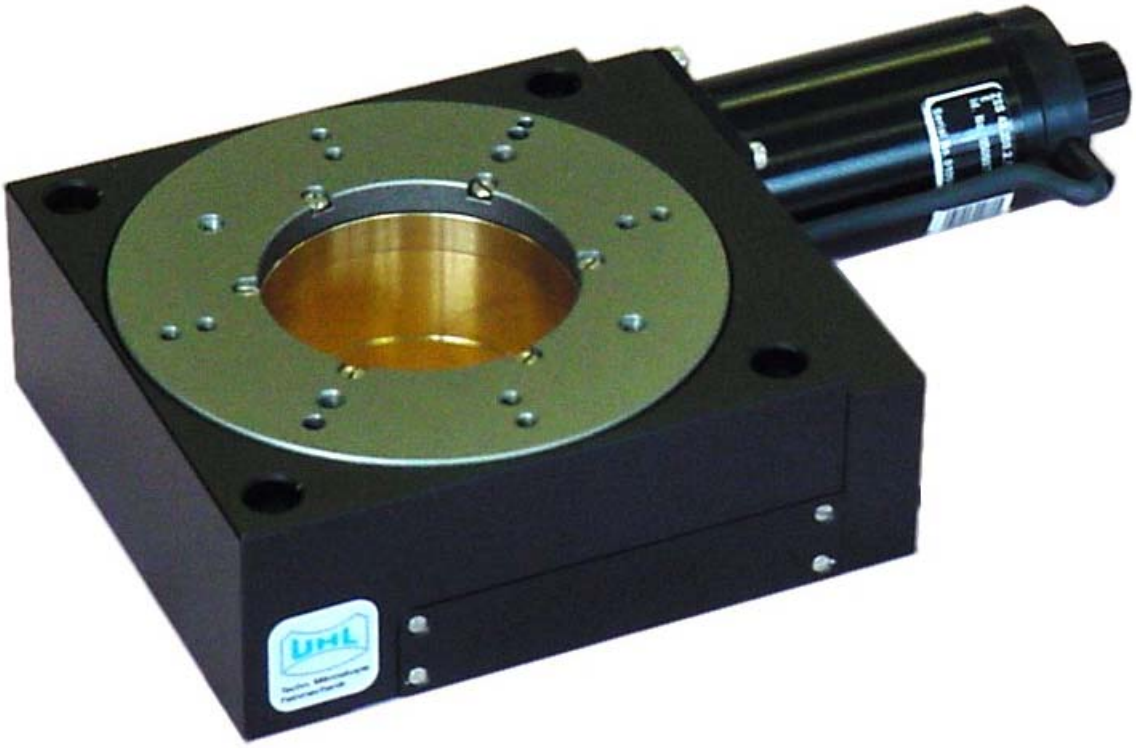

Revision No: 04

The rotary stages of the RT series are used, when rotationally symmetric components must be measured or positioned with high accuracy. Pre-loaded bearings provide a very precise radial and axial runout. The exact positioning is ensured by a zero-backlash pre-loaded worm drive.

The rotary stages can be combined in various ways with other components of the UHL modular system.

Rotary Stage

RT4

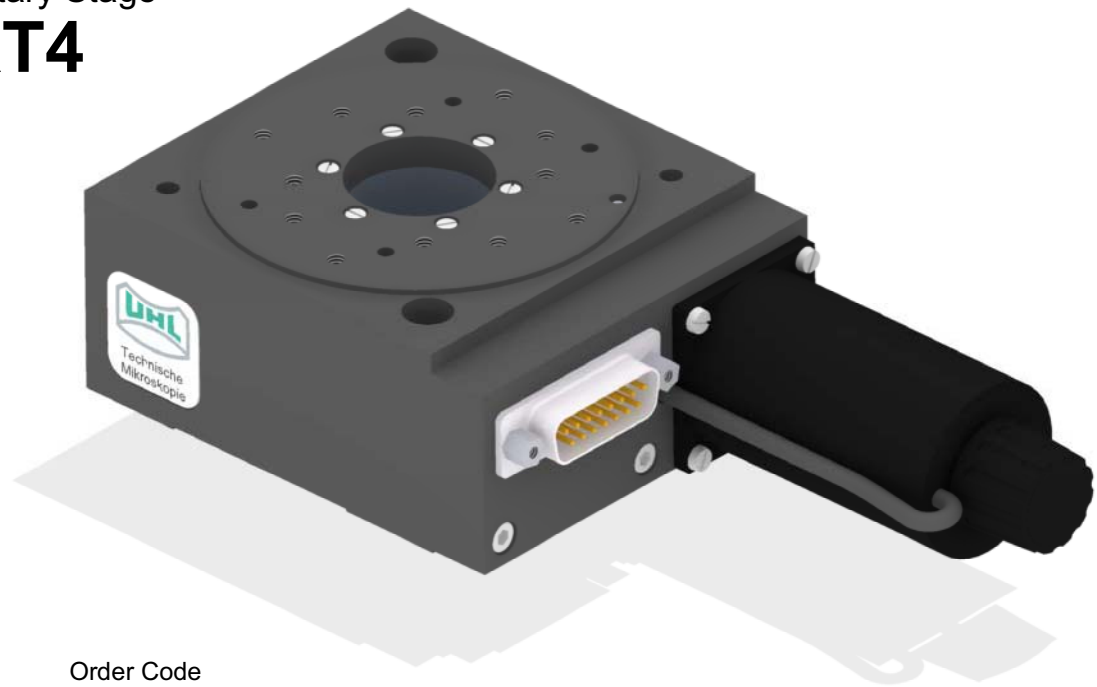

Order Code

RT4-NSOC

Accuracy Class:
A: axial and radial runout 2 µm at ⌀37 mm delivery with measuring protocol
C: axial and radial runout 18 µm at ⌀37 mm

Measuring System:
O: without measuring system
M: rotary encoder
D: rotary encoder on motor shaft

Motors:
S: stepper motor
G: DC motor
H: manually operated

Model:
N: worm gear
H: Harmonic-Drive gear

Sample Configurations:

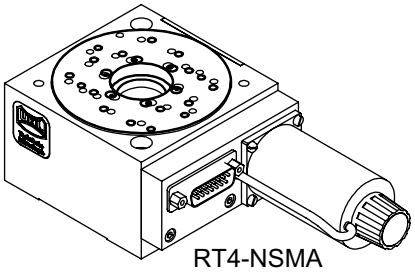

RT4-NSMA

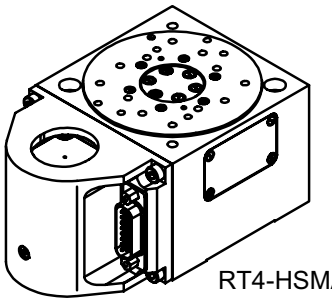

RT4-HSMA

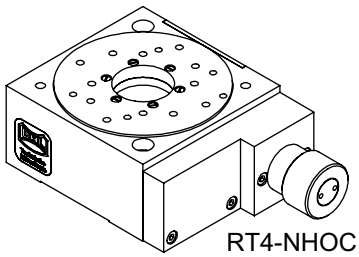

RT4-NHOC

Specifications RT4-N:

Travel:	Infinite, limit switch for reference position
Material:	Stress-relieved aluminum alloy, black anodized
Bearing:	Backlash-free preloaded angular contact ball bearings
Drive:	Backlash-free preloaded worm gear (i = 70 : 1)
Weight O/M:	1,0 kg / 1,2 kg
Max. speed:	5 rev./min

Options:
- custom motors
- encoder signal TTL

Version RT4-NSOx

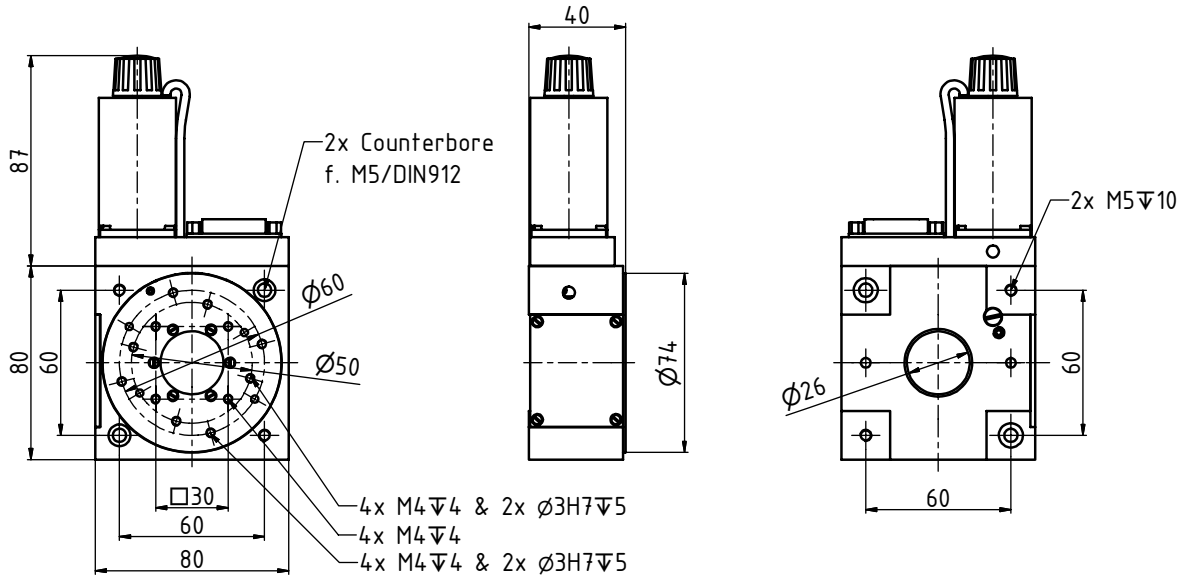

Version RT4-NSMx

measuring system: Numerik Jena, 1 Vpp, 3600 counts
(encoder head: RIK4-2C39/3600CWZ,
encoder disc: RS 39/25/3600)

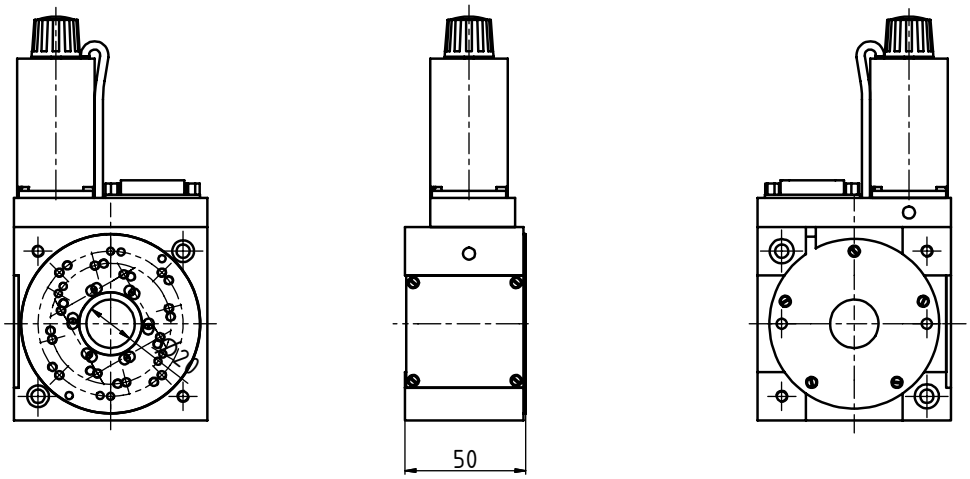

Revision No: 04

Specifications RT4-H:

Travel:	Infinite, limit switch for reference position
Material:	Stress-relieved aluminum alloy, black anodized
Bearing:	Backlash-free preloaded angular contact ball bearings
Drive:	Backlash-free Harmonic-Drive gear (i = 100 : 1)
Weight:	1,4 kg
Max. speed:	18 rev./min
	Numerik Jena, 1 Vpp, 9000 counts (encoder head: RIK4-2C45/9000CWZ, encoder disc: RS 45/30/9000)

Options:
- custom motors
- encoder signal TTL

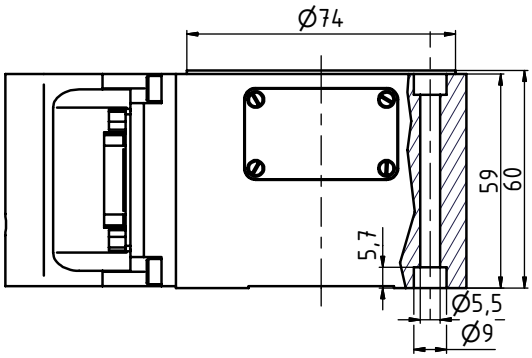

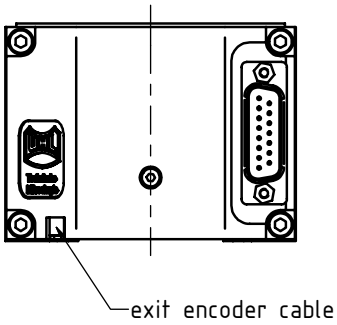

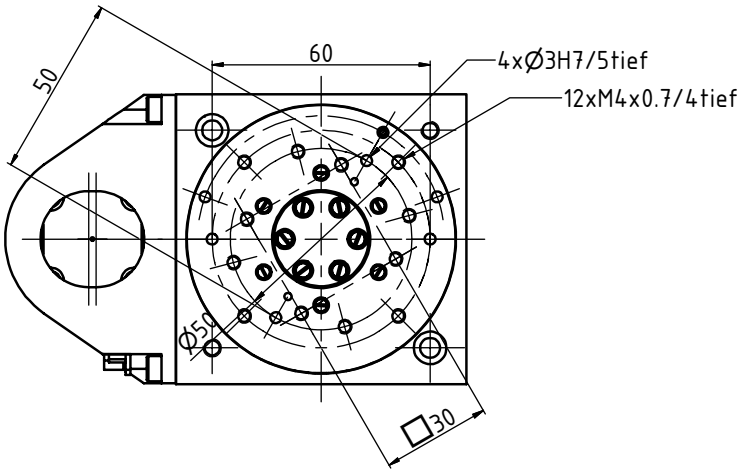

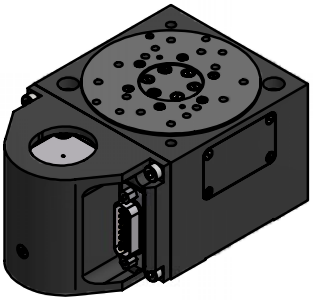

Rotary Stage

RT5

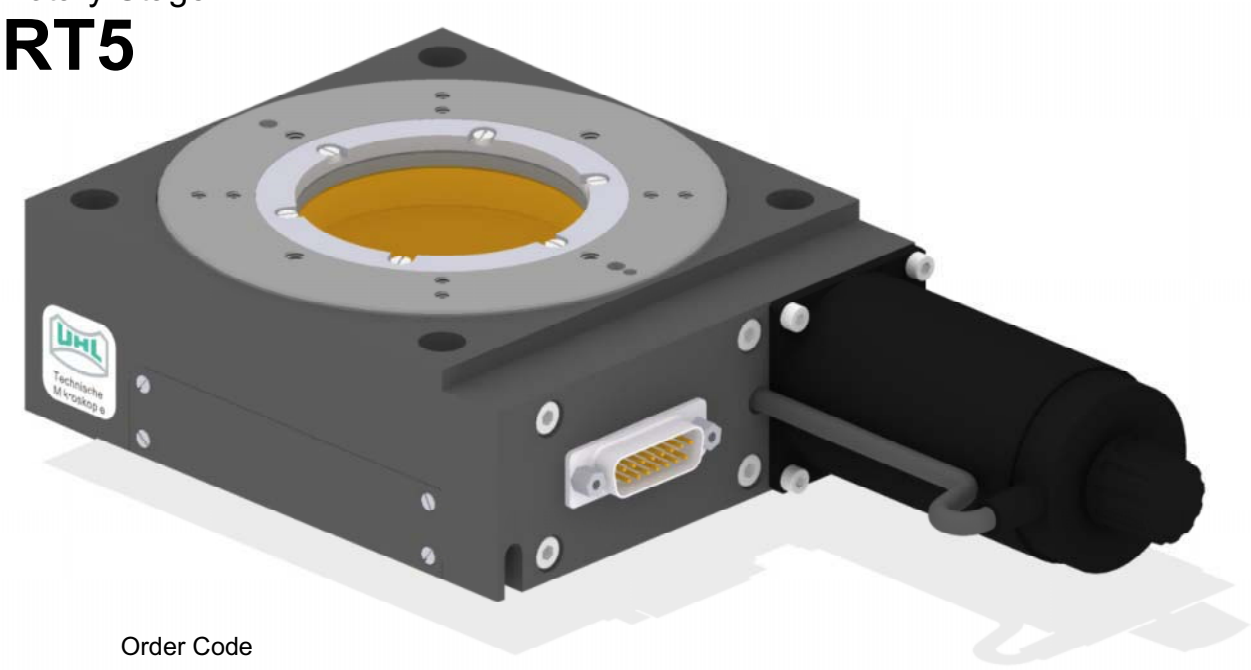

Order Code

RT5-NSMA

Accuracy Class:
- A: axial and radial runout 5 µm at ⌀60 mm delivery with measuring protocol
- C: axial and radial runout 15 µm at ⌀60 mm

Measuring System:
- O: without measuring system
- M: rotary encoder
- D: rotary encoder on motor shaft

Motors:
- S: stepper motor Phytron ZSS43.200.2,5
- G: DC motor Maxon RE035 42V 90W

Model:
- N: worm gear
- H: Harmonic-Drive gear

Revision No: 04

Sample Configurations:

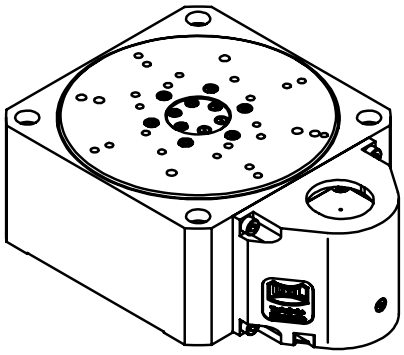

RT5-HSMA

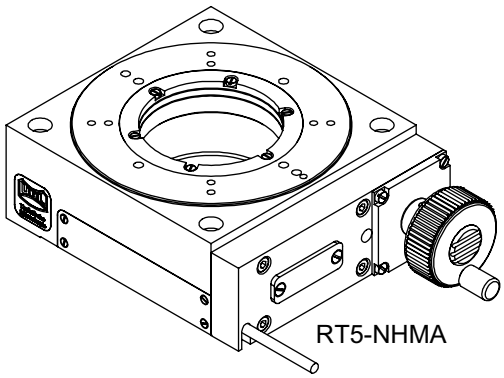

RT5-NHMA

Specifications RT5-N:

Travel:	Infinite, limit switch for reference position
Material:	Stress-relieved aluminum alloy, black anodized
Bearing:	Backlash-free preloaded crossed roller bearing
Drive:	Backlash-free preloaded worm gear (i = 128 : 1)
Weight O/M:	2,0 kg
Max. speed:	5 rev/min
Measuring system:	Numerik Jena, 1 Vpp, 9000 counts (encoder head: RIK4-2C92/9000CWZ, encoder disc: RS 92/70/9000)

Options:
- custom motors
- encoder signal TTL

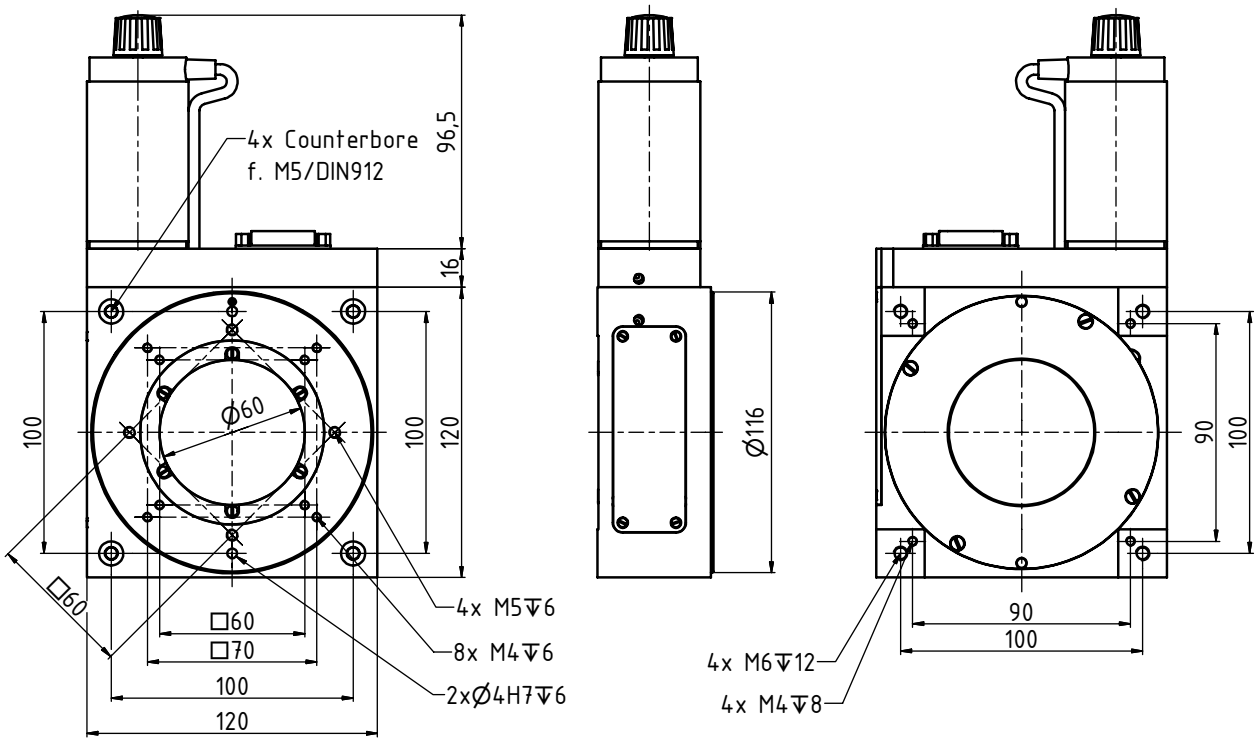

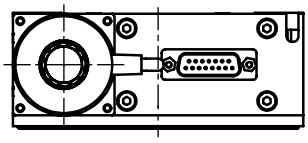

Specifications RT5-H:

Travel:	Infinite, limit switch for reference position
Material:	Stress-relieved aluminum alloy, black anodized
Bearing:	Heidenhain MRP 5080
Drive:	Backlash-free Harmonic-Drive gear (i = 100 : 1)
Weight:	2,1 kg
Max. speed:	18 rev./min
Measuring system:	Heidenhain MRP 5080, 1Vpp, 30.000 counts / rev.

Options:
- custom motors
- encoder signal TTL

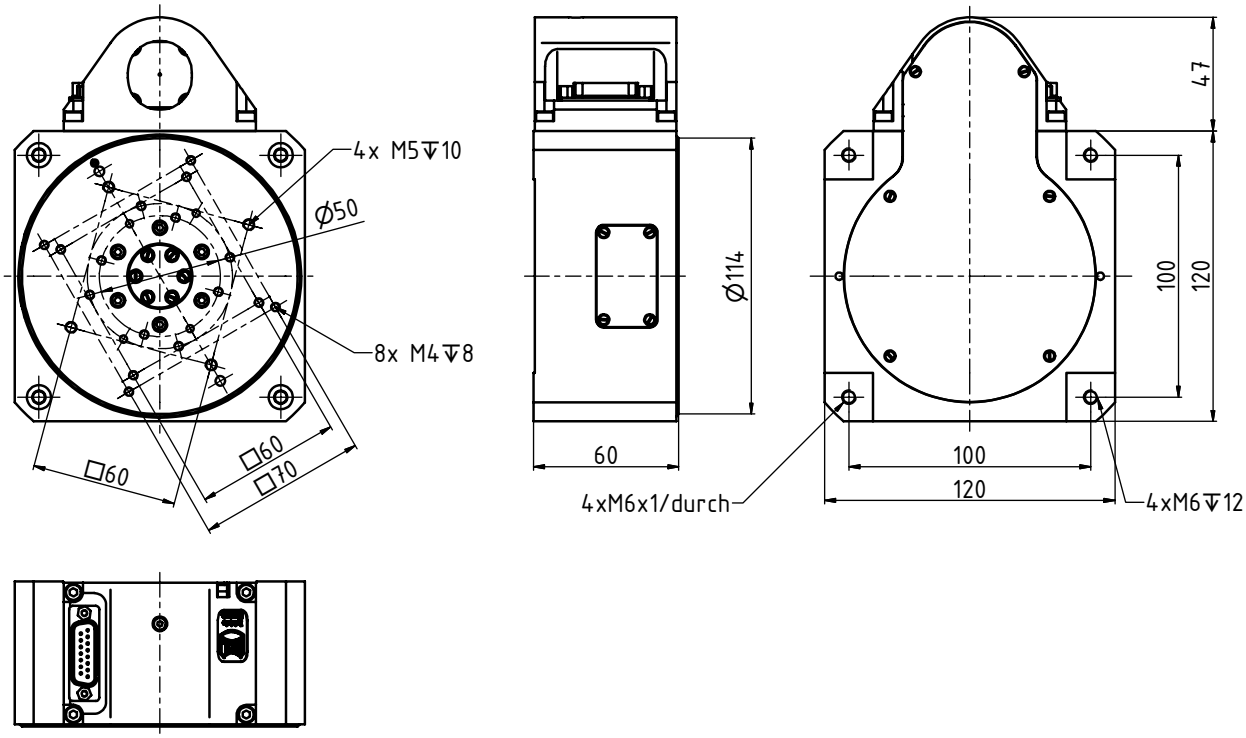

Revision No: 04

Permissible loads
Max. permissible axial load: 100 N
Max. permissible radial load: 60 N
Max. permissible tilting torque: 1.5 Nm
Max torque: 2 Nm

Accuracy
Axial guideway accuracy: ±0.5 µm
Radial guideway accuracy: ±0.5 µm
Wobbel of the axis: 1.5"
Axial runout: 10 µm
Repeatability of the encoder: 0.3"

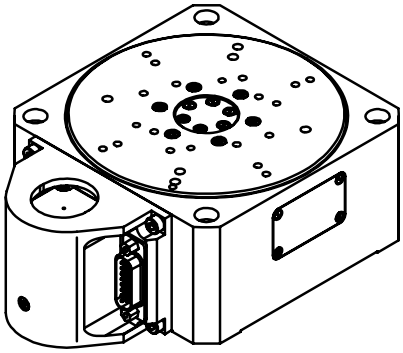

Rotary Stage

RT6

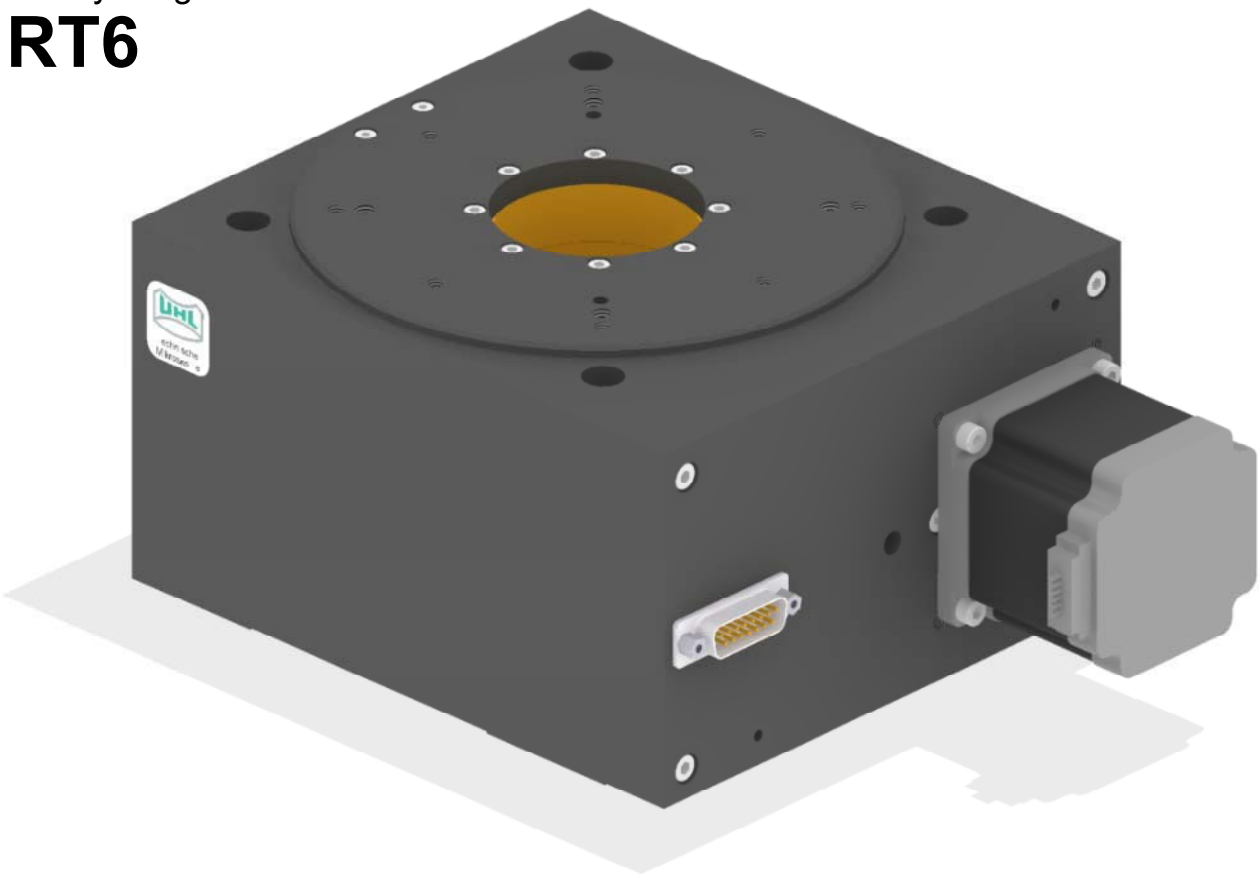

Order Code

RT6-NSOC

Accuracy Class:
C: axial and radial runout 30 µm at ⌀60 mm

Measuring System:
O: without measuring system
D: rotary encoder on motor shaft

Motors:
S: stepper motor Sanyo Denki 103H7123-6840

Traveling Range:
N: normal

Specifications:

Travel:	Infinite, limit switch for reference position
Material:	Stress-relieved aluminum alloy, black anodized
Bearing:	Backlash-free preloaded ball bearings
Drive:	Backlash-free preloaded worm gear (i = 106 : 1)
Weight:	6.3 kg

Options:

- custom motors

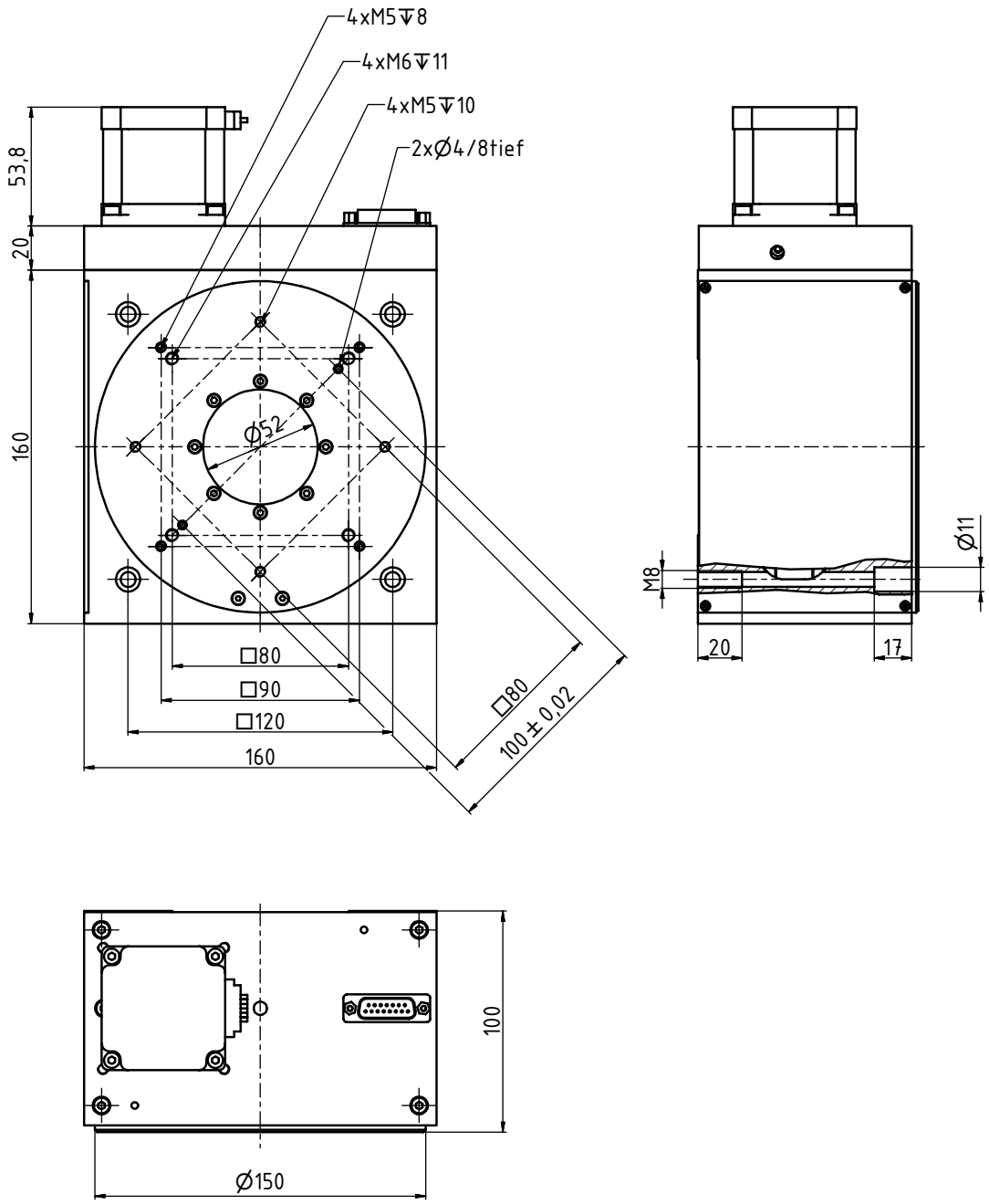

Revision No: 04

Rotary Stage

RT7

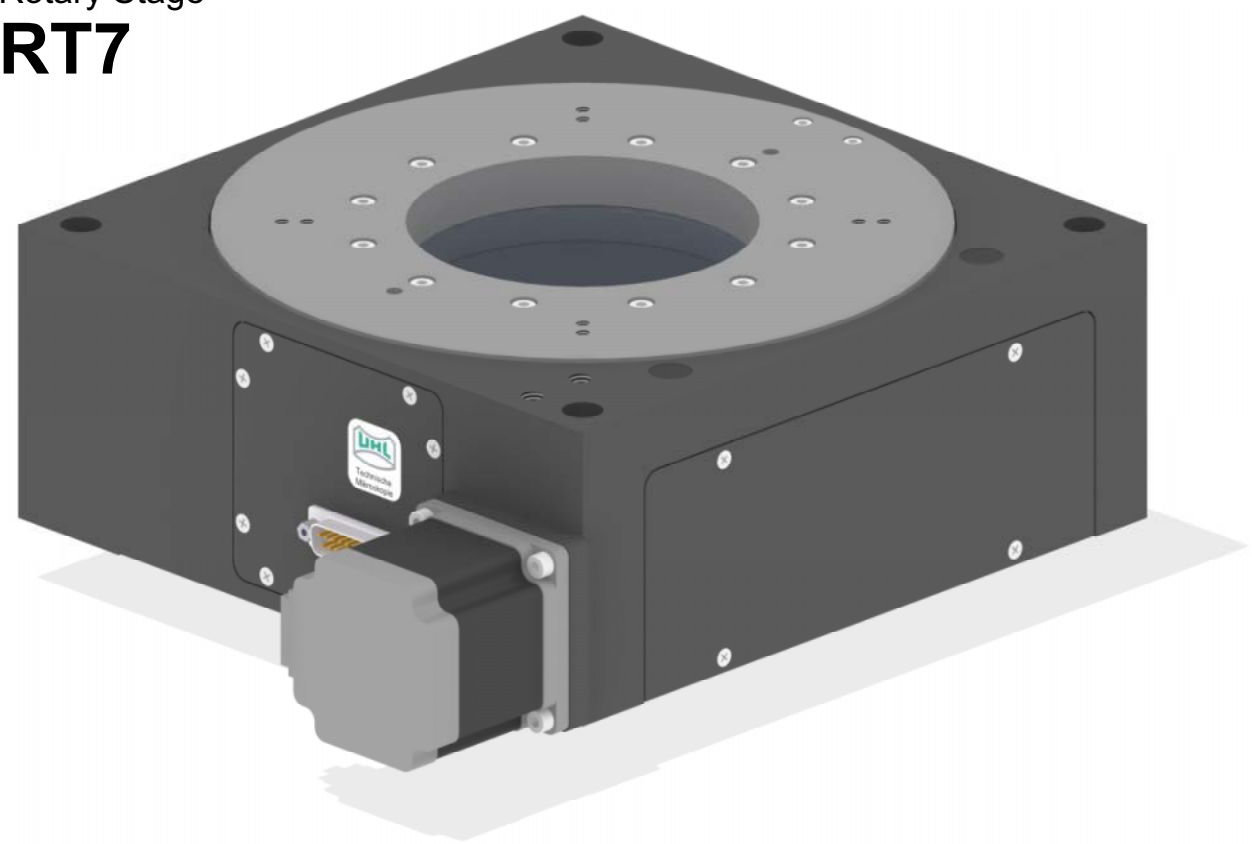

Order Code

RT7-NSOC

Accuracy Class:
C: axial and radial runout 20 µm at ⌀110 mm

Measuring System:
O: without measuring system
D: rotary encoder on motor shaft

Motors:
S: stepper motor Sanyo Denki 103H7123-6840

Traveling Range:
N: normal

Specifications:

Travel:	Infinite, limit switch for reference position
Material:	Stress-relieved aluminum alloy, black anodized
Bearing:	Backlash-free preloaded crossed roller bearing
Drive:	Backlash-free preloaded worm gear (i = 100 : 1)
Weight:	13.4 kg

Options:

- custom motors

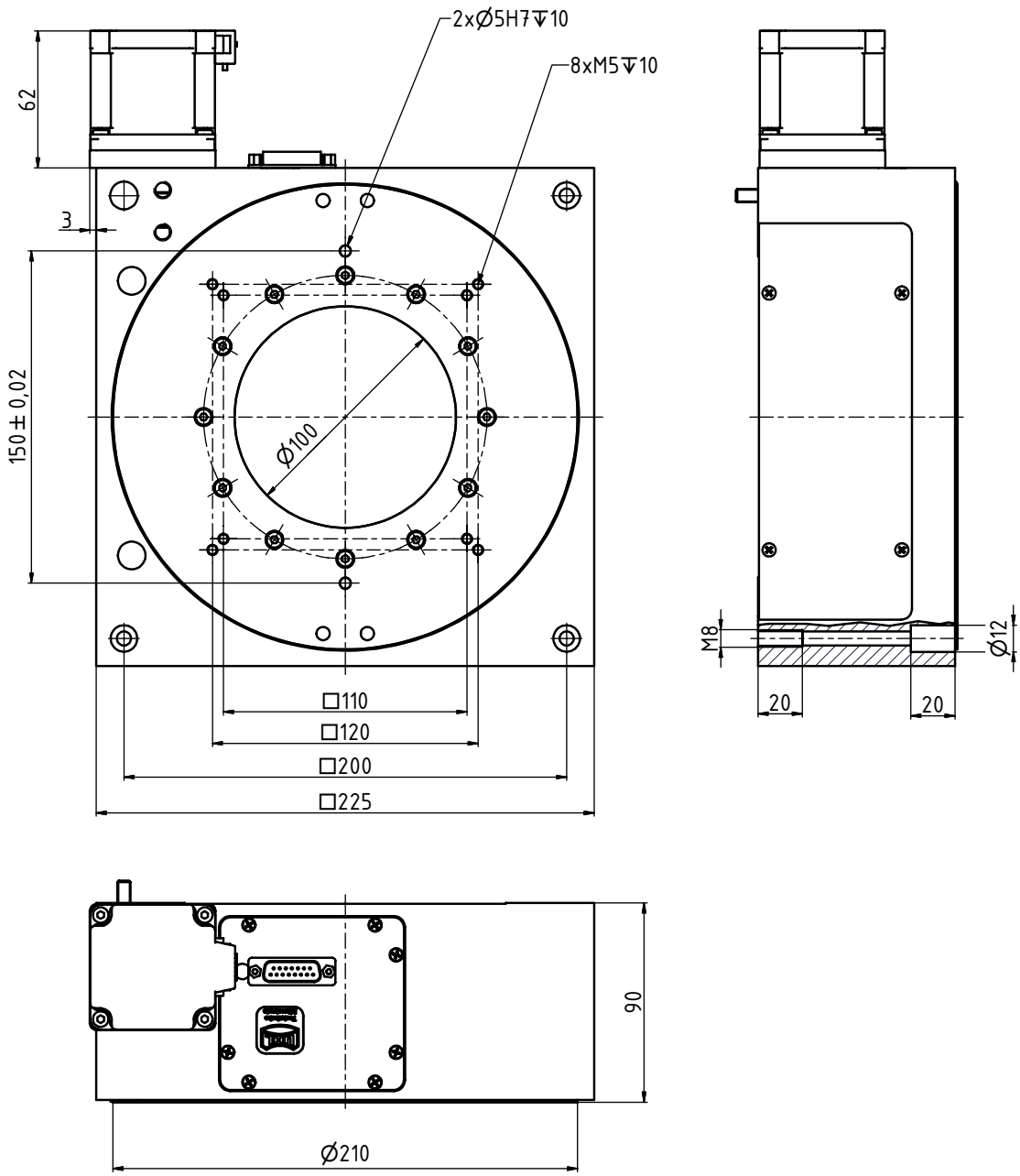

Revision No: 04

Application example

Special setup for measuring shaving heads

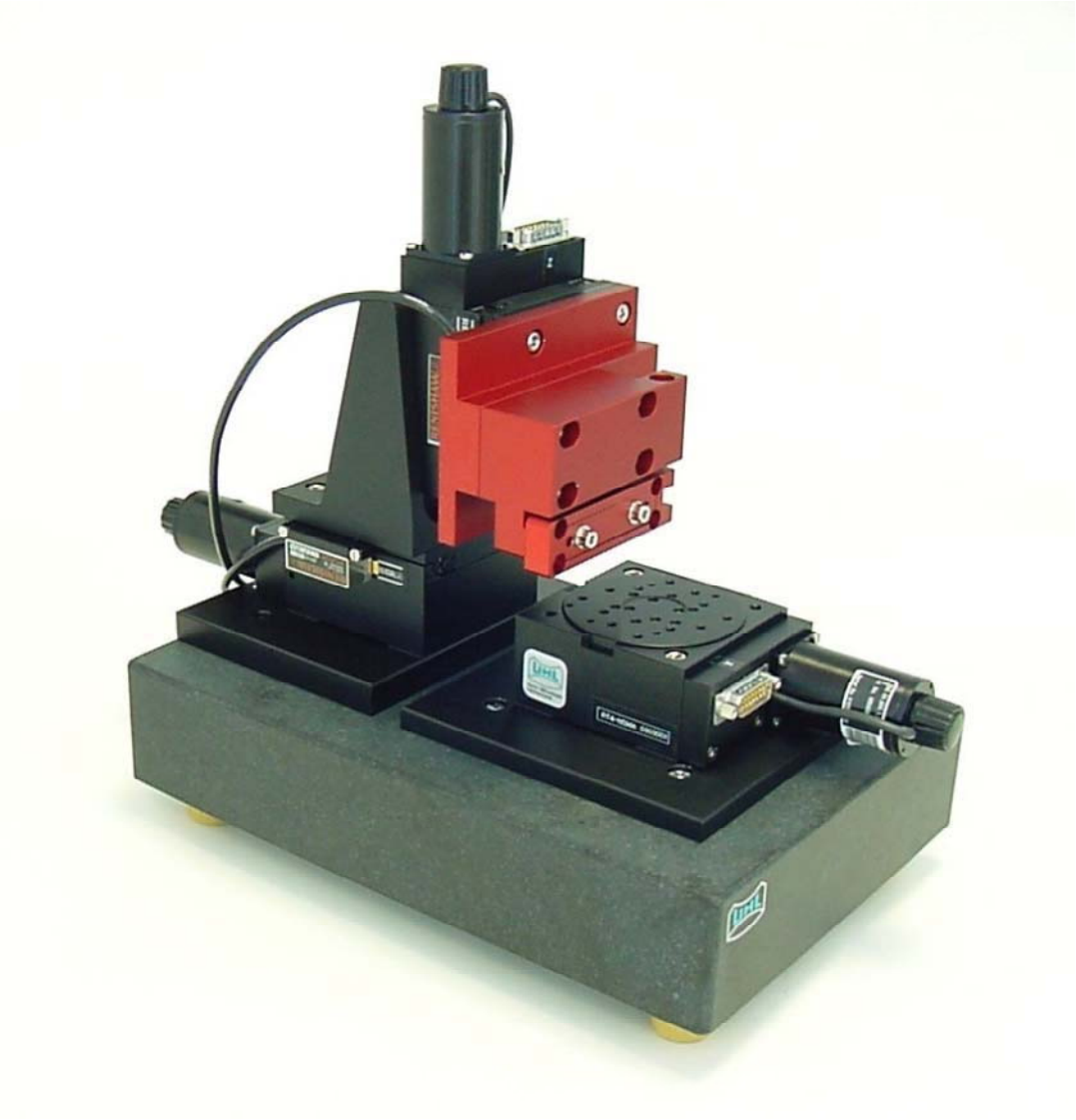

Walter Uhl
technische Mikroskope GmbH & Co. KG
Loherstrasse 7
D-35614 Asslar
Telefon: ++49 (0) 6441 8 86 03
Telefax: ++49 (0) 6441 8 57 18
email: walteruhl@t-online.de
Internet: www.walteruhl.com

4. Lift Stages
HT Series

Revision No: 04

The lift stages of the HT series provides accurate positioning in vertical direction.

By standardized mounting holes, they fit seamlessly into the UHL modular program.

Lift Stage

HT4

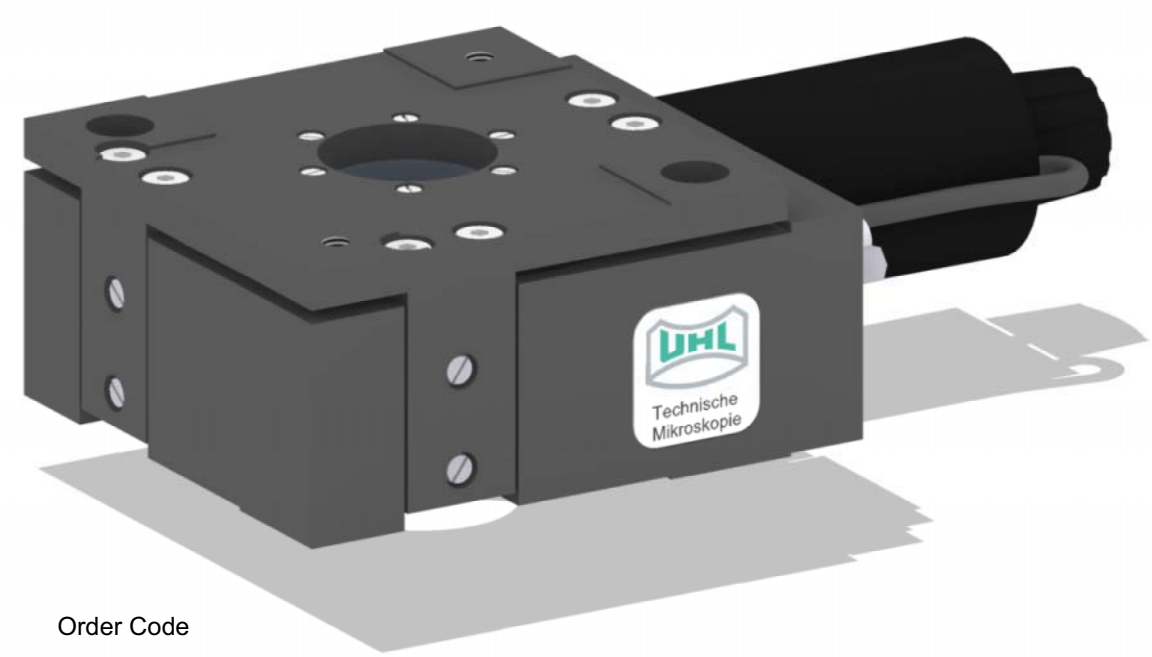

Order Code

HT4-NSOC

Accuracy Class:
C: straightness : 0.05 mm

Measuring System:
O: without measuring system
D: rotary encoder on motor shaft

Motors:
S: stepper motor Phytron ZSS33.200.1,2
G: DC motor Maxon RE025 24V
H: manually operated

Traveling Range:
N: 12 mm

Sample Configurations:

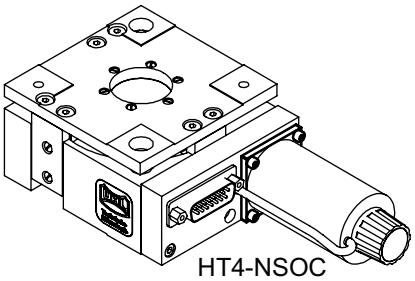

HT4-NSOC

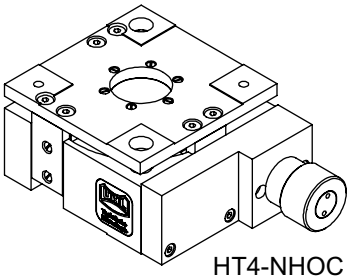

HT4-NHOC

Specifications:

Travel:	12 mm
Material:	Stress-relieved aluminum alloy, black anodized
Guiding:	Backlash-free preloaded roller guides
Drive:	Backlash-free preloaded worm gear and multi start thread, pitch in Z direction 0.07143 mm
Weight:	1 kg

Options:
- custom motors

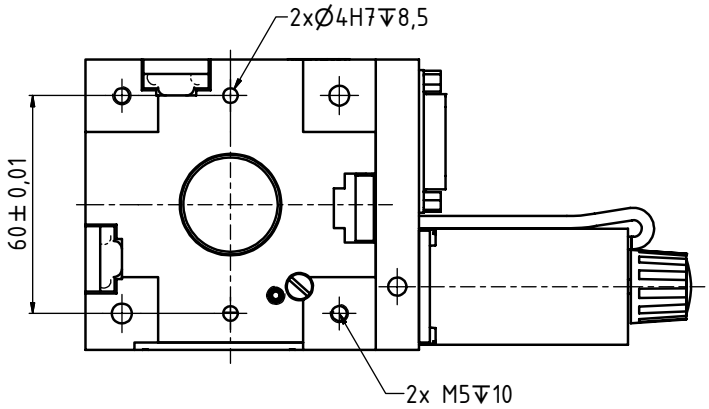

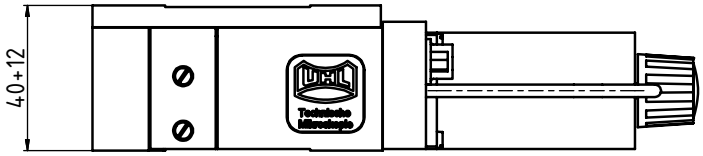

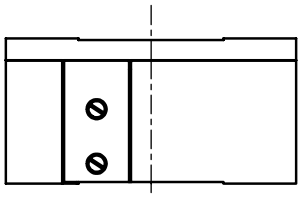

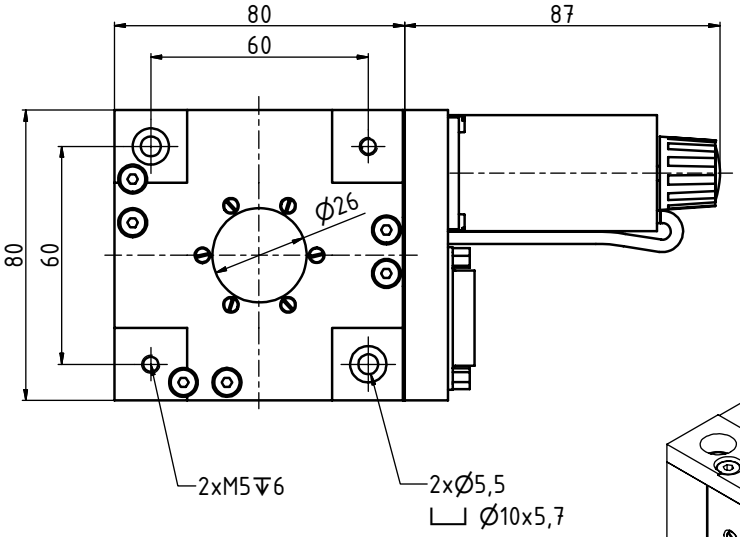

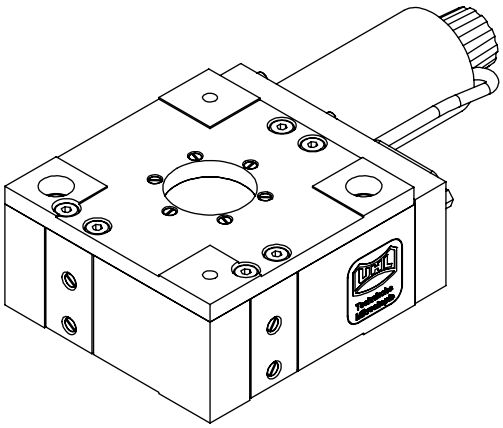

Revision No: 04

Lift Stage

HT7

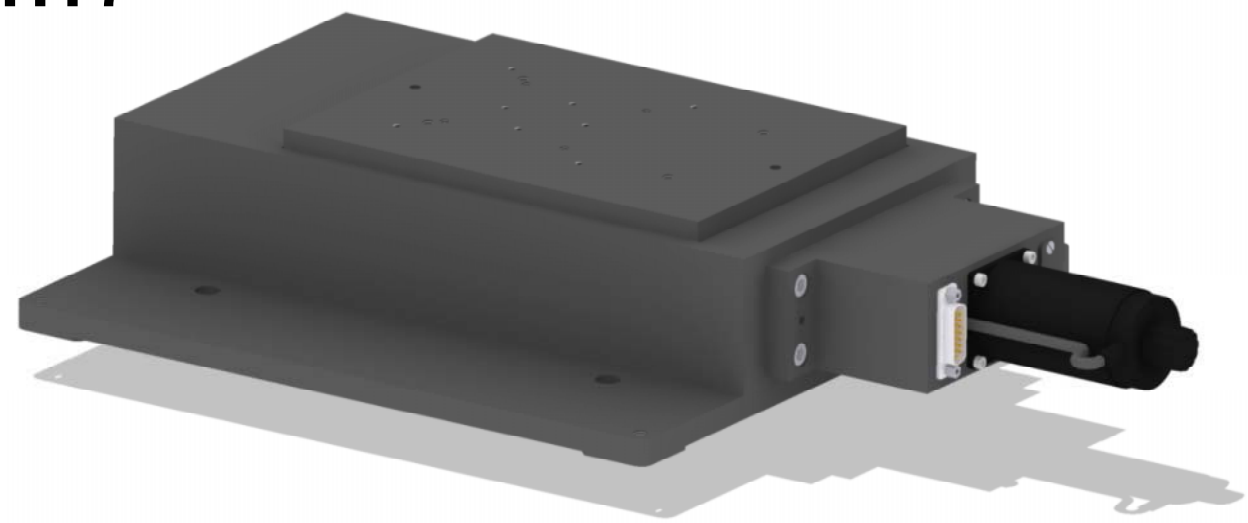

Order Code

HT7-NSOC

Accuracy Class:
C: straightness: 5 µm

Measuring System:
O: without measuring system
D: rotary encoder on motor shaft
M: linear encoder, 1 Vpp,
20 µm pitch, reference mark at midpoint,
gold-scale, positioning accuracy:
2.5 µm + L/200 (L in mm),
delivery with measuring protocol

Motors:
S: stepper motor Phytron ZSS43.200.2,5
G: DC motor Maxon RE035 42V 90W

Traveling Range:
N: 30 mm

Sample Configurations:

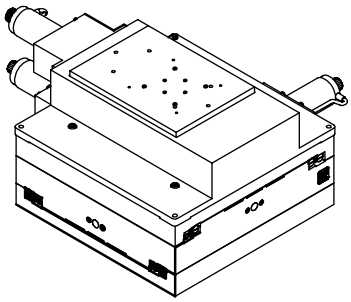

Positioningsystem XYZ:
HT7-LSOC mounted on a
GT8-NSOC

Specifications:

Travel:	30 mm
Material:	Stress-relieved aluminum alloy, black anodized
Guiding:	Backlash-free preloaded cross roller guides
Drive:	Backlash-free preloaded ball screw with pitch 4 mm and wedge 25°, pitch in Z direction 1.8652 mm
Weight:	10 kg

Options:
- custom motors
- encoder signals TTL

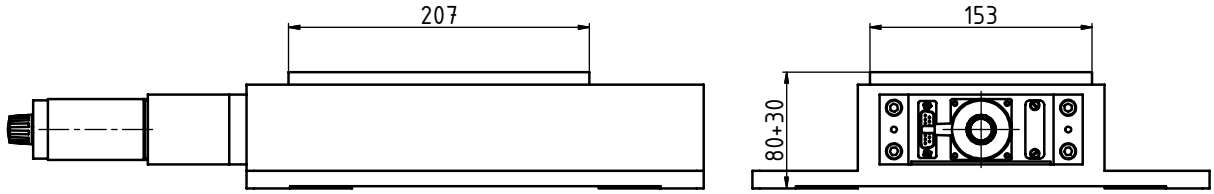

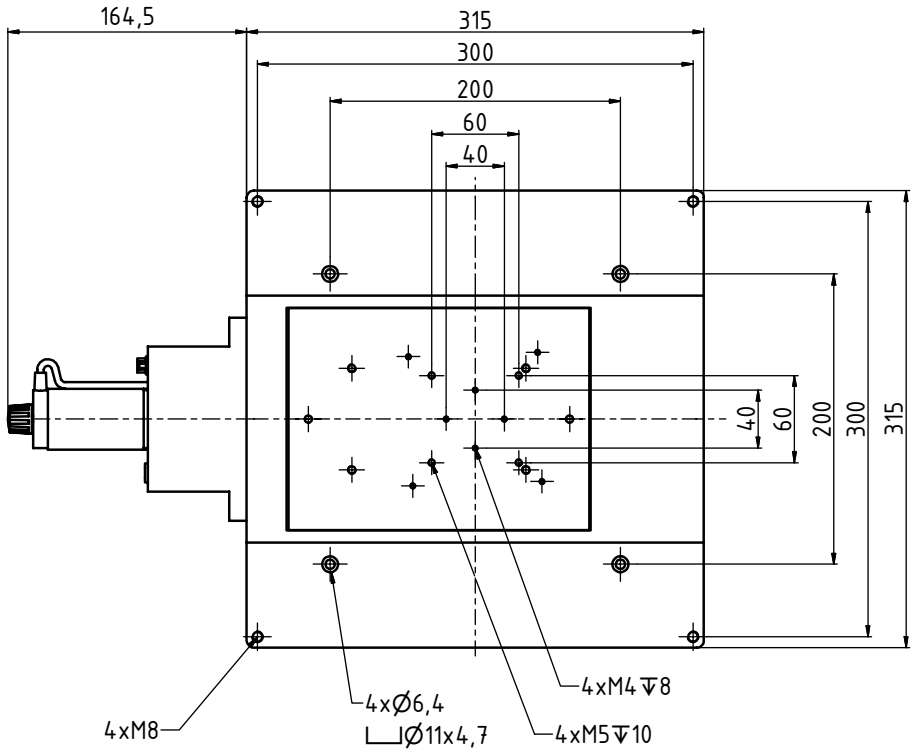

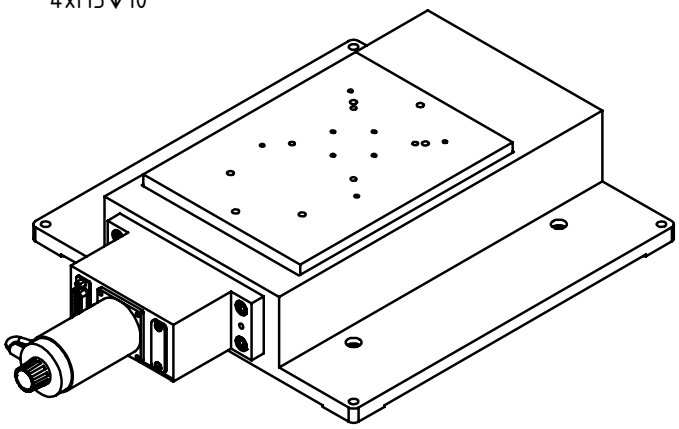

Revision No: 04

Application example

Special setup for measuring semiconductor structures
with magnetic field sensors

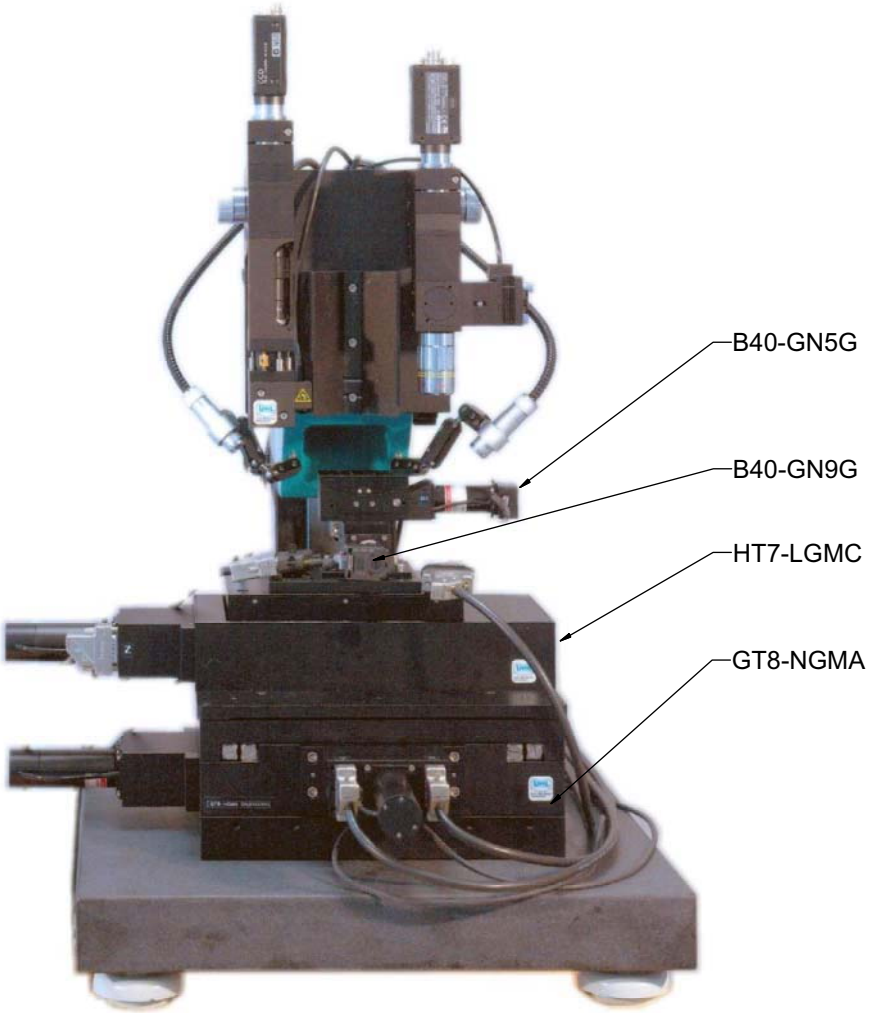

Walter Uhl
technische Mikroskope GmbH & Co. KG
Loherstrasse 7
D-35614 Asslar
Telefon: ++49 (0) 6441 8 86 03
Telefax: ++49 (0) 6441 8 57 18
email: walteruhl@t-online.de
Internet: www.walteruhl.com

5. Stands
and
Accessories

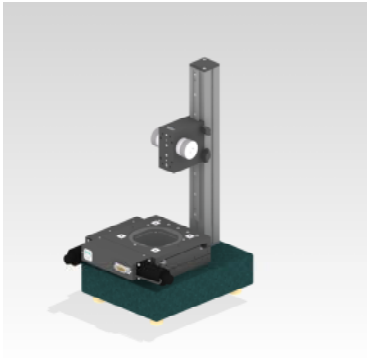

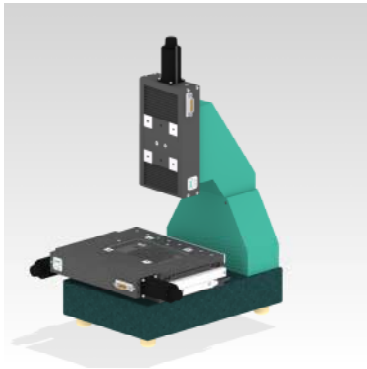

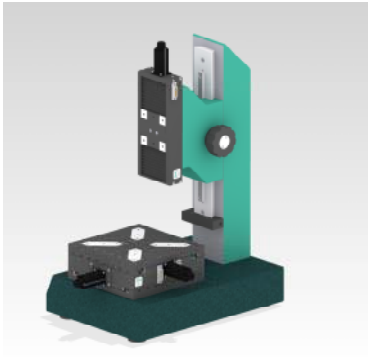

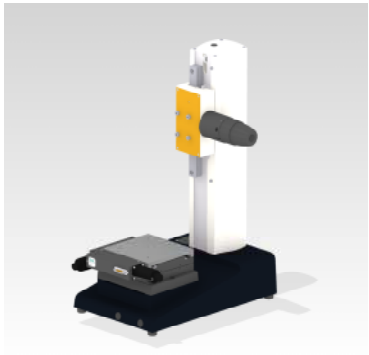

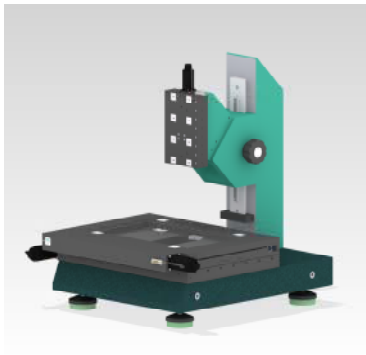

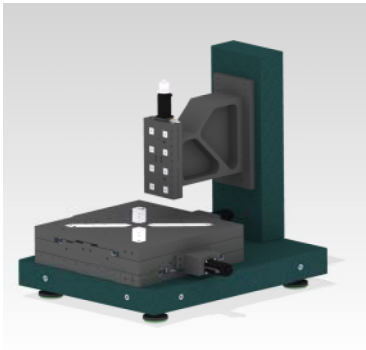

Revision No: 04

Especially for the OEM market, a number of stands has been developed that facilitate essentially the use of our linear and XY stages for customized applications. The stands have a high basic accuracy regarding the flatness and squareness of the mounting areas. Depending on their applications the stands are made out of granite, grey cast or aluminium. In addition there is a large selection of adapter plates and brackets to combine our stages in many different ways.

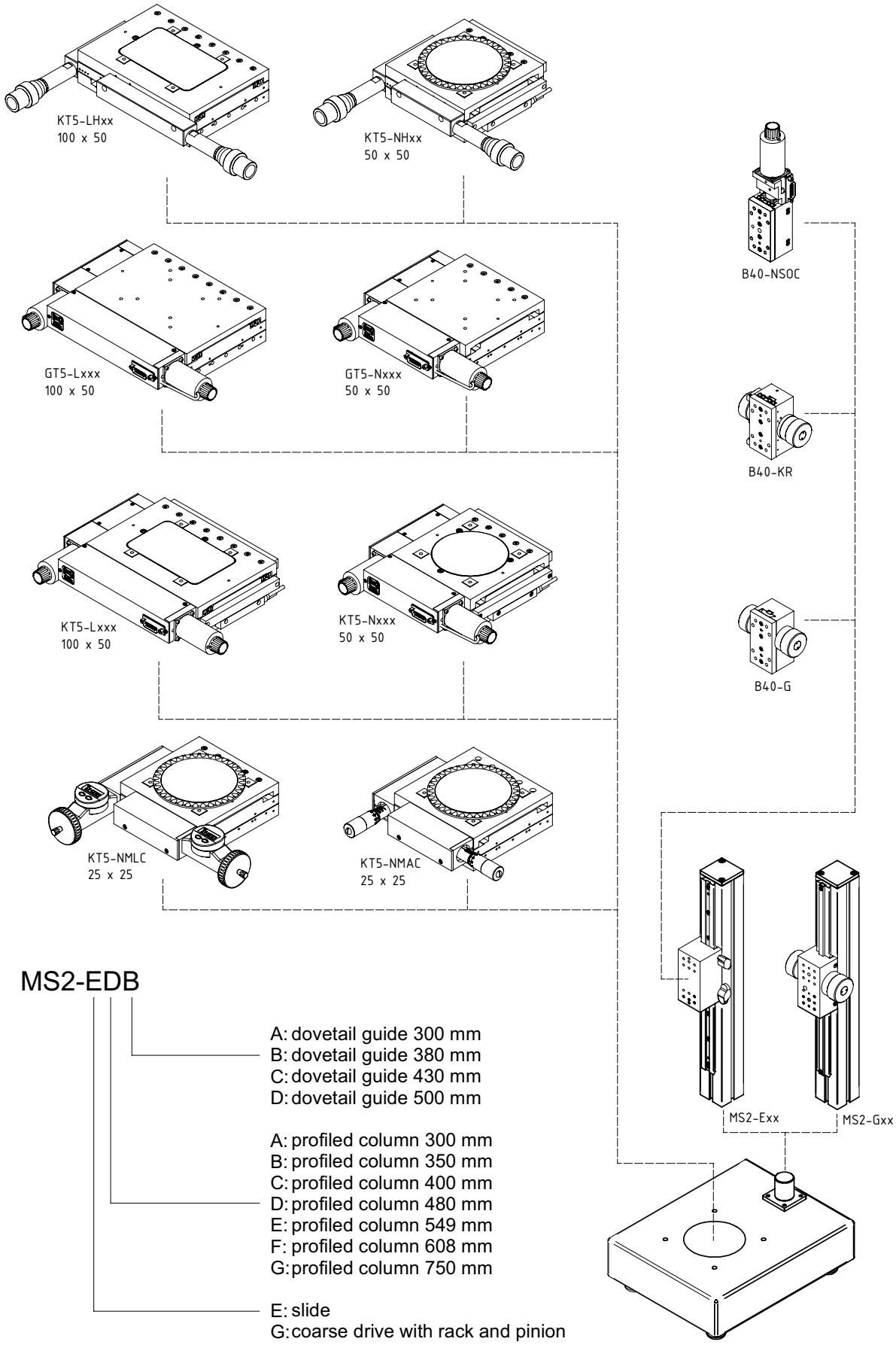

MS2-EDB

A: dovetail guide 300 mm
B: dovetail guide 380 mm
C: dovetail guide 430 mm
D: dovetail guide 500 mm

A: profiled column 300 mm
B: profiled column 350 mm
C: profiled column 400 mm
D: profiled column 480 mm
E: profiled column 549 mm
F: profiled column 608 mm
G: profiled column 750 mm

E: slide
G: coarse drive with rack and pinion
(possible with dovetail guide A,B und D)

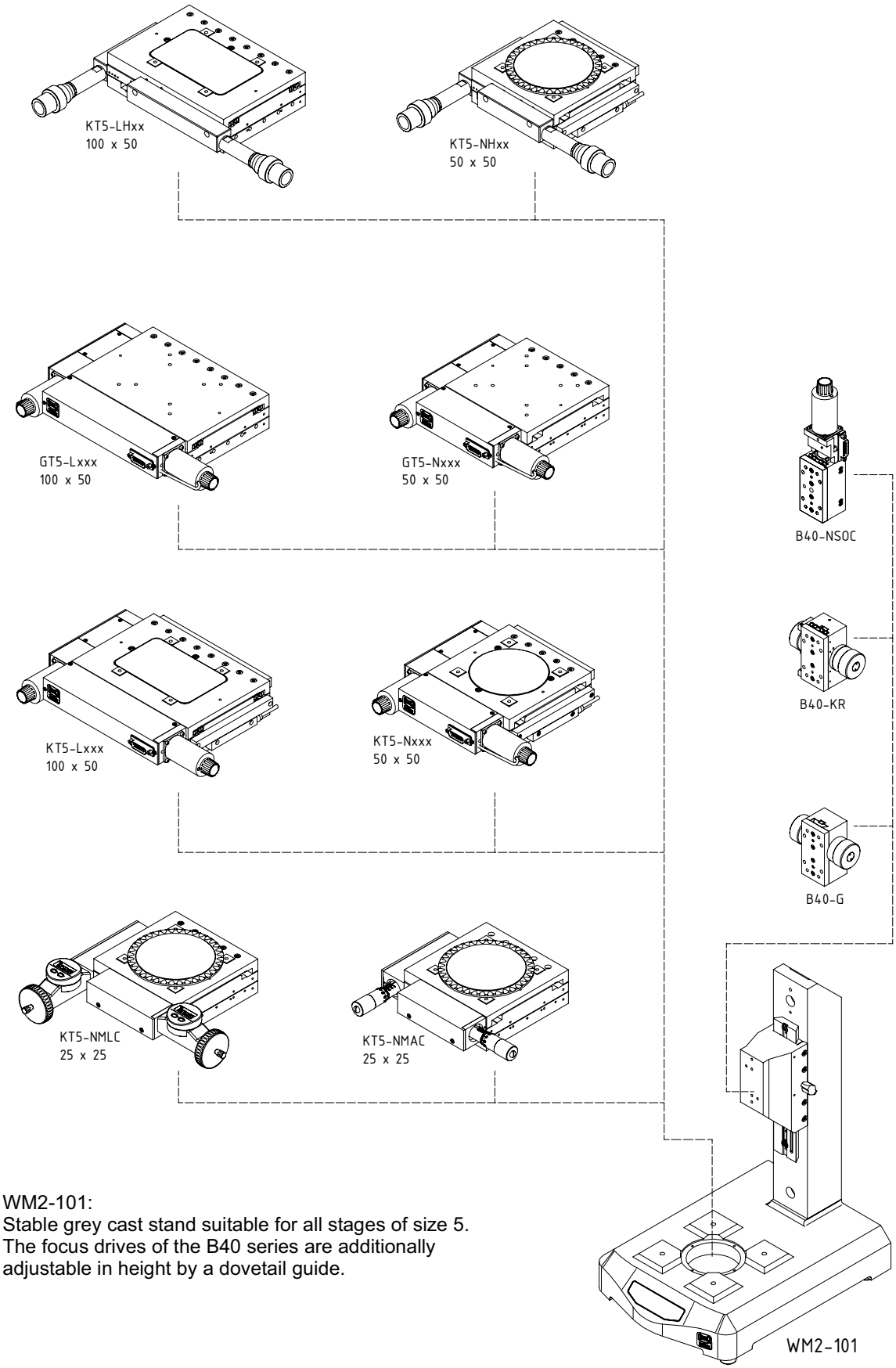

WM2-101:
Stable grey cast stand suitable for all stages of size 5.
The focus drives of the B40 series are additionally adjustable in height by a dovetail guide.

Revision No: 04

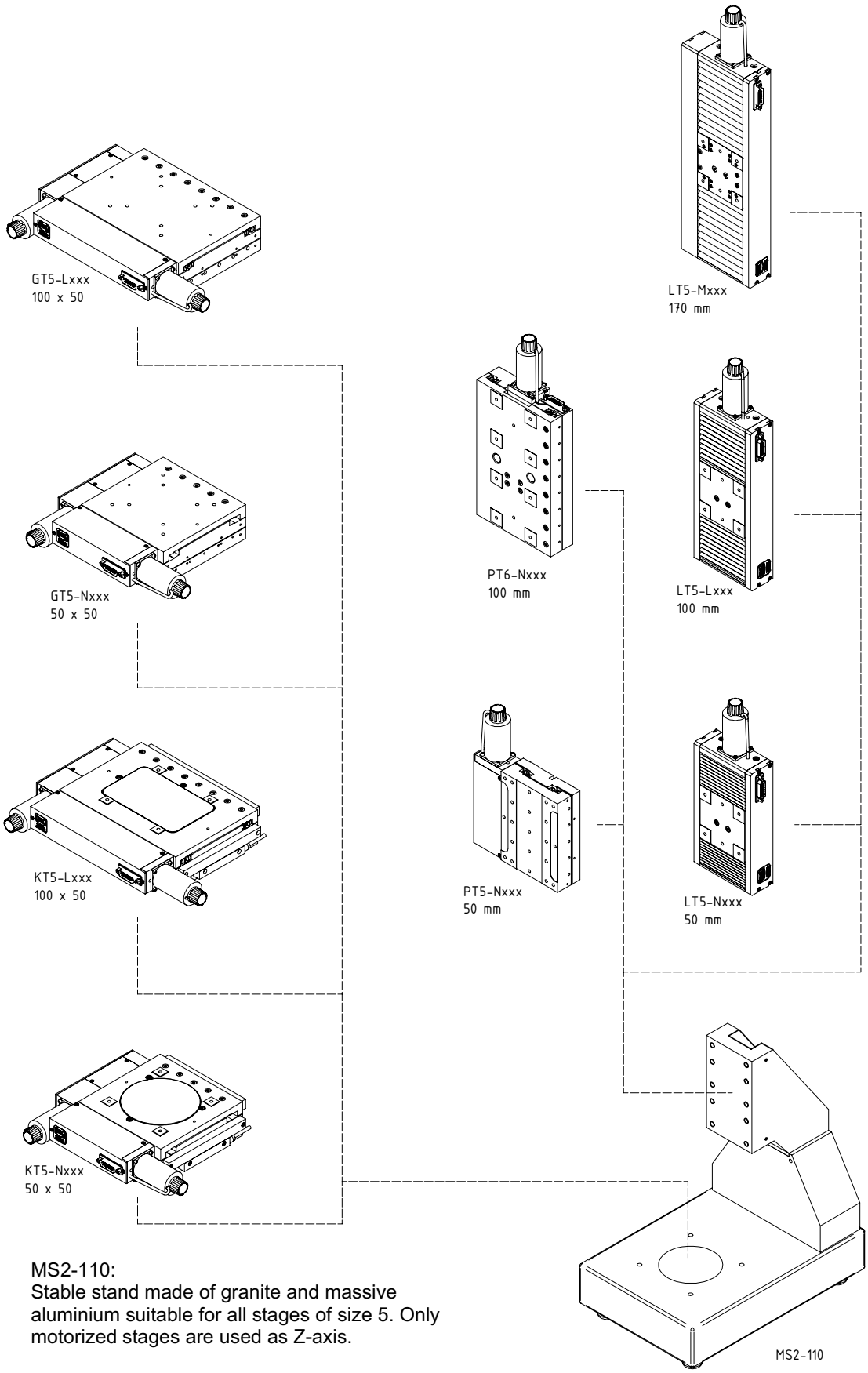

MS2-110:
Stable stand made of granite and massive aluminium suitable for all stages of size 5. Only motorized stages are used as Z-axis.

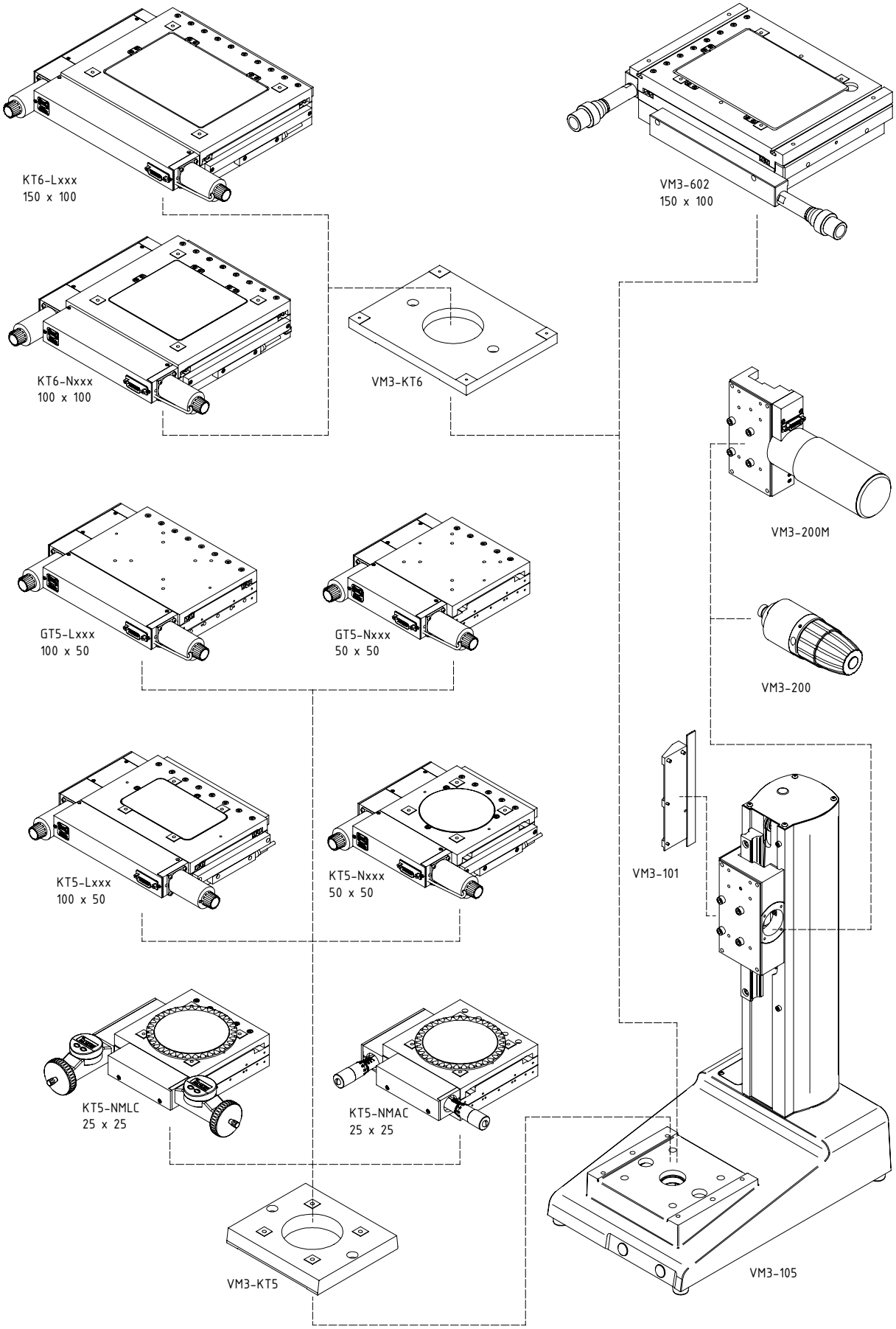

Revision No: 04

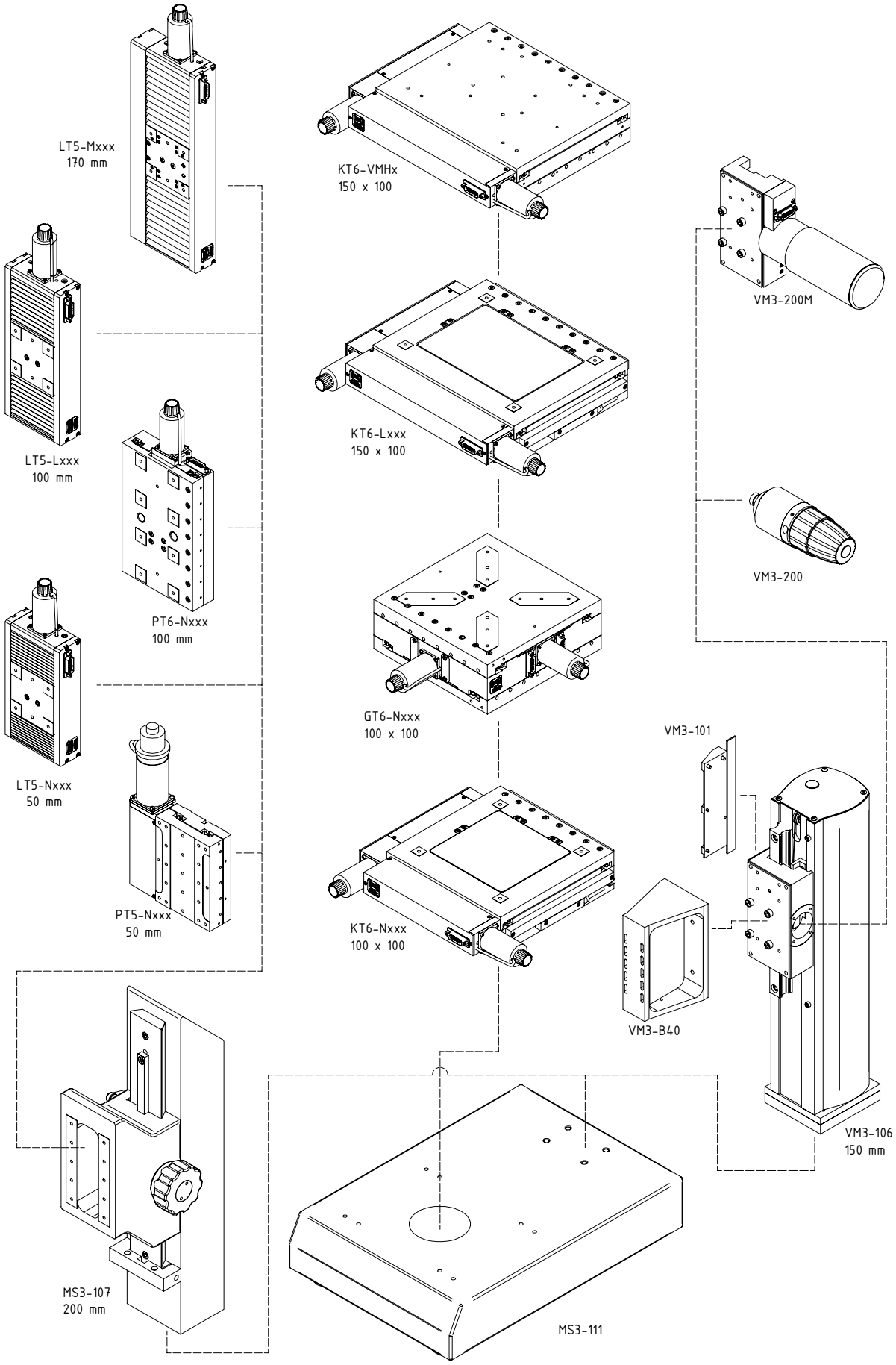
LT5-Mxxx
170 mm
KT6-VMHx
150 x 100
VM3-200M
LT5-Lxxx
100 mm
KT6-Lxxx
150 x 100
VM3-200
PT6-Nxxx
100 mm
GT6-Nxxx
100 x 100
LT5-Nxxx
50 mm
VM3-101
PT5-Nxxx
50 mm
KT6-Nxxx
100 x 100
VM3-B40
VM3-106
150 mm
MS3-107
200 mm
MS3-111

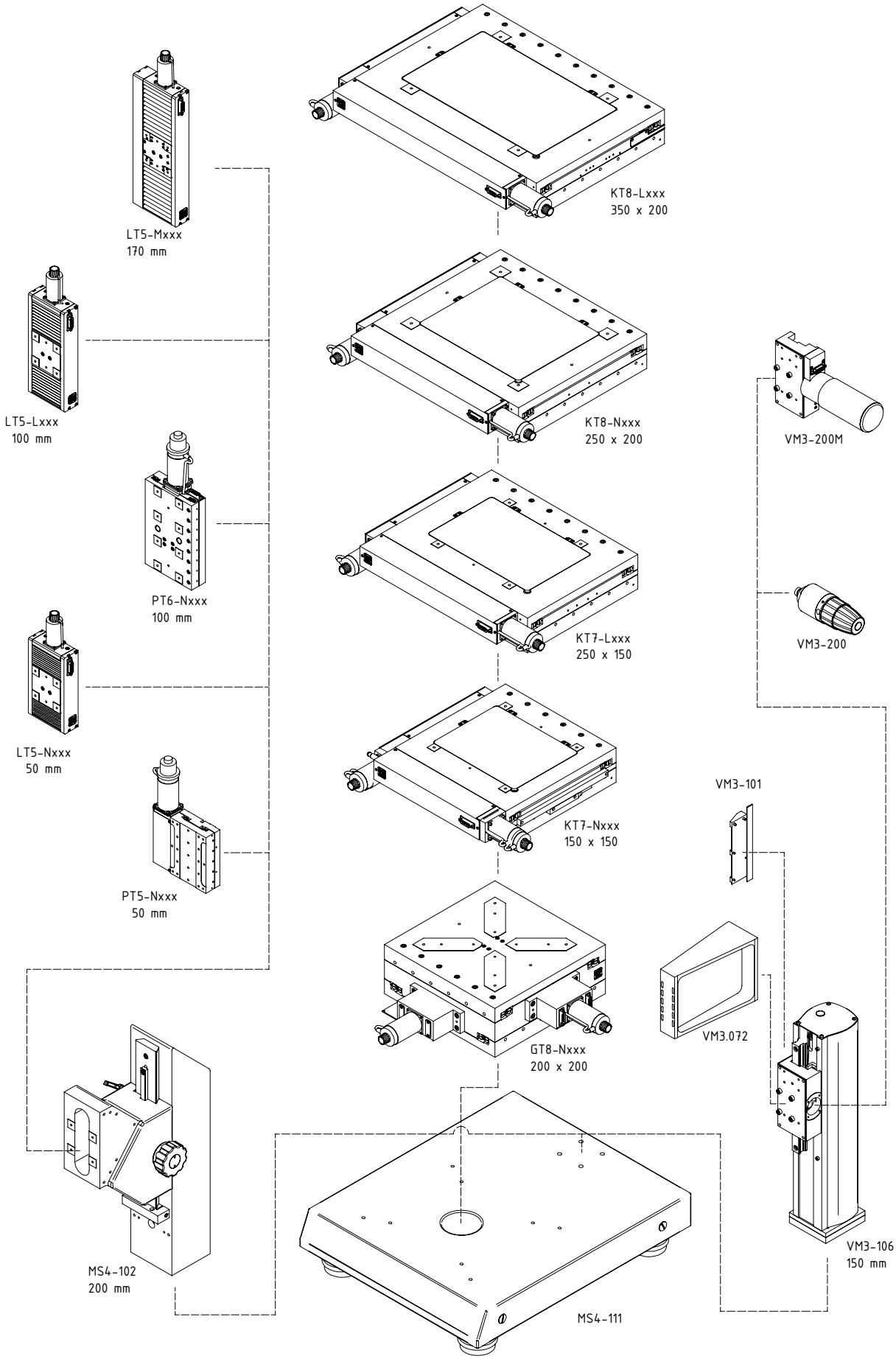

Revision No: 04

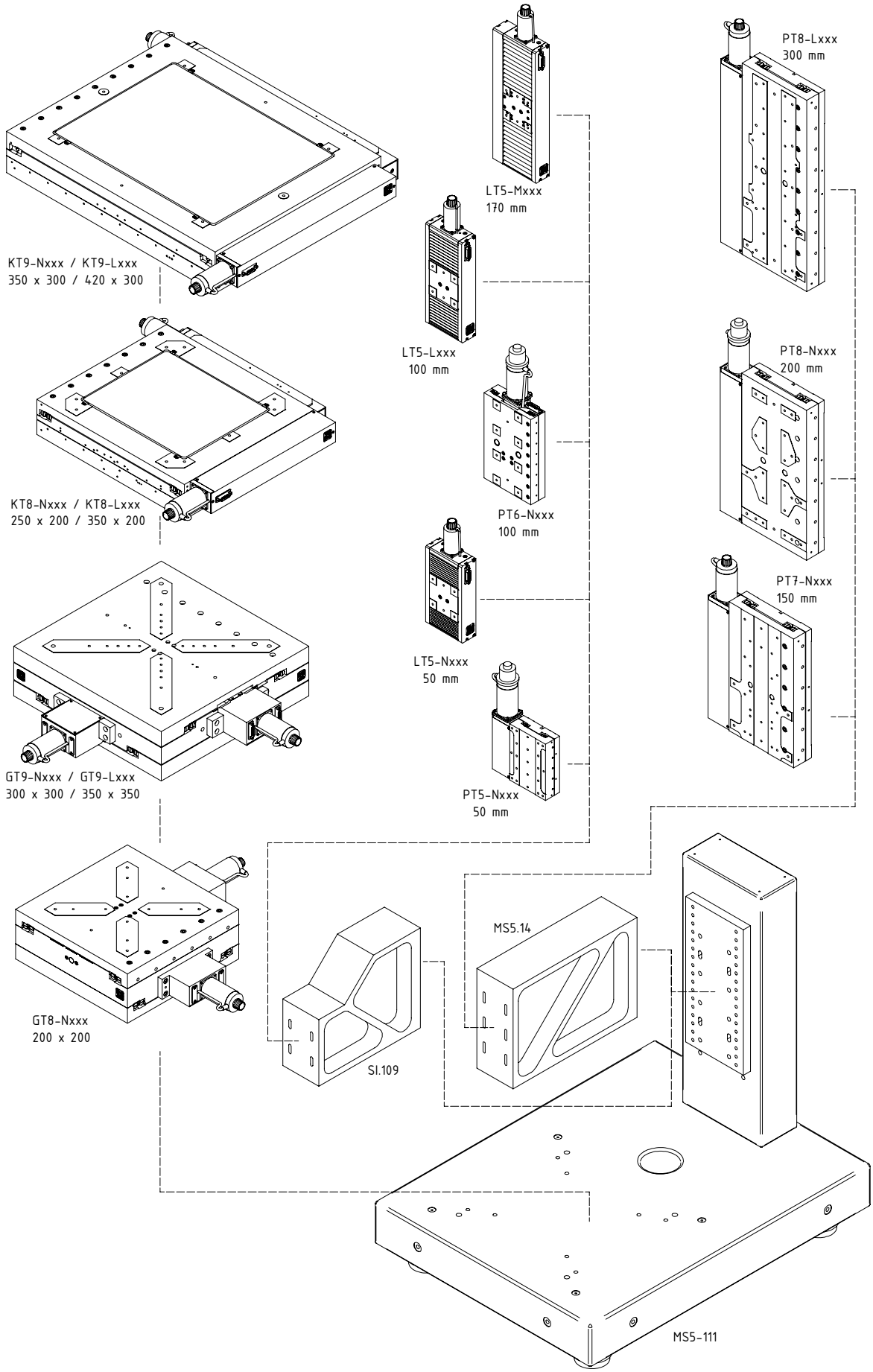
KT9-Nxxx / KT9-Lxxx
350 x 300 / 420 x 300
KT8-Nxxx / KT8-Lxxx
250 x 200 / 350 x 200
GT9-Nxxx / GT9-Lxxx
300 x 300 / 350 x 350
GT8-Nxxx
200 x 200
LT5-Mxxx
170 mm
LT5-Lxxx
100 mm
PT6-Nxxx
100 mm
LT5-Nxxx
50 mm
PT5-Nxxx
50 mm
PT8-Lxxx
300 mm
PT8-Nxxx
200 mm
PT7-Nxxx
150 mm
MS5.14
SI.109
MS5-111

Adapter Plate

suitable for KT5, GT5 and PT7 with 7 x 7 M4 threaded holes in a grid of 20 mm

Order-No.: **KT5-NP42**

suitable for KT5, GT5 and PT7 with 5 x 5 M5 threaded holes in a grid of 30 mm

Order-No.: **KT5-NP53**

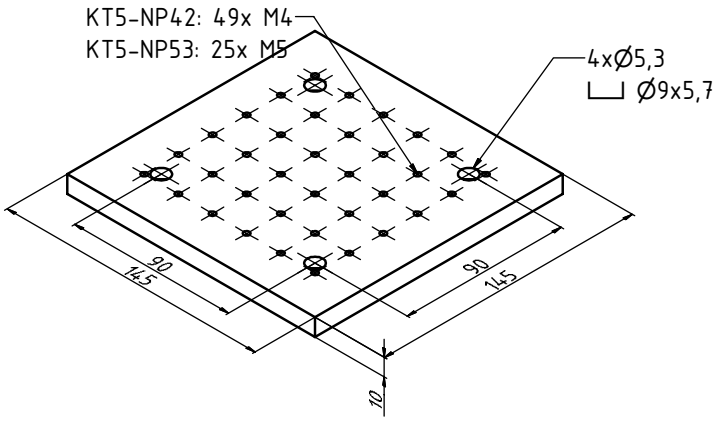

Adapter Plate

suitable for KT6-N and GT6 with 5 x 5 M5 threaded holes in a grid of 30 mm

Order-No.: **KT6-NP53**

suitable for KT6-L with 7 x 5 M5 threaded holes in a grid of 30 mm

Order-No.: **KT6-LP53**

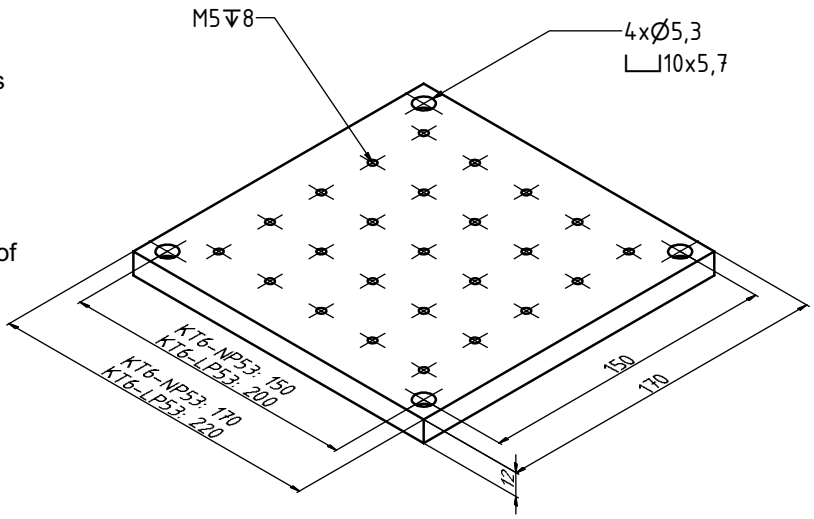

Adapter Plate

suitable for KT7 and GT8 with 7 x 7 M5 threaded holes in a grid of 30 mm

Order-No.: **KT7-NP53**

suitable for KT8 with 9 x 7 M5 threaded holes in a grid of 30 mm

Order-No.: **KT8-NP53**

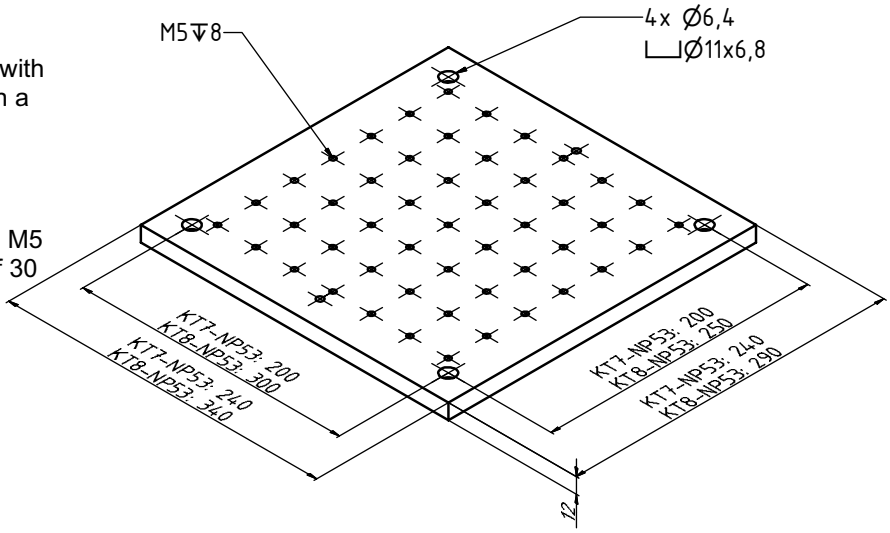

Revision No: 04

Adapter Plate

suitable for mounting B40-microscopes on stages with threaded holes M5 in a grid of 60 mm, such as linear stage LT5

Order-No.: **LT5-B40**

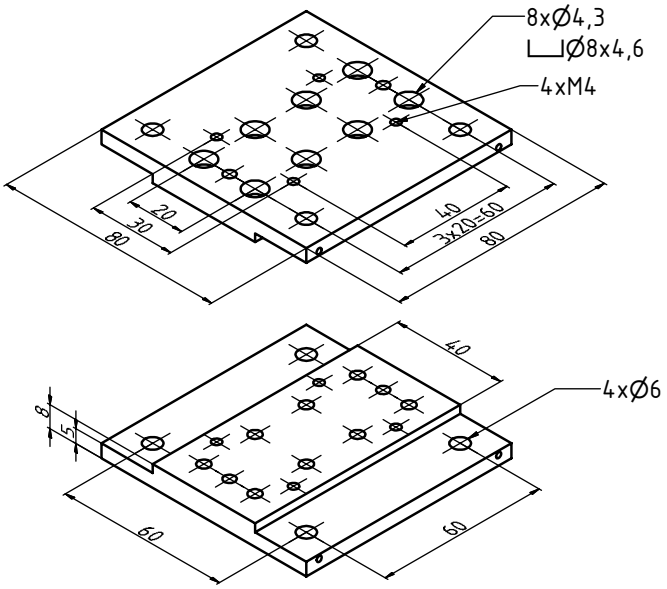

Adapter Plate

suitable for mounting precision linear stage PT4 on stages with threaded holes M5 in a grid of 60 mm, such as linear stage LT5

Order-No.: **LT5-M80**

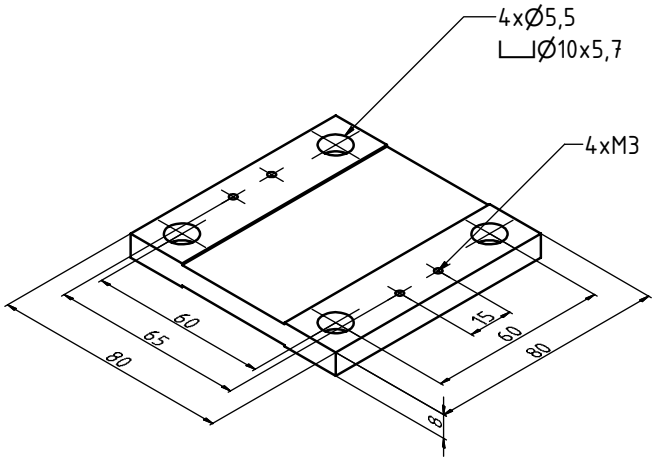

Adapter Plate

suitable for mounting rotary stages RT5 on stages with threaded holes M5 in a grid of 60 mm, such as linear stage LT5

Order-No.: **LT5-RT5**

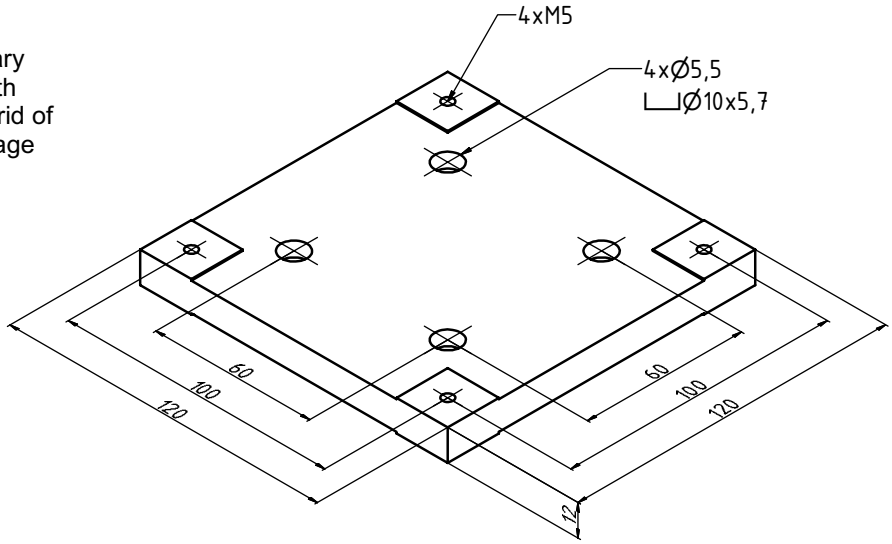

Bracket

suitable for mounting stages with threaded holes M5 in a grid of 60 mm, such as linear stage LT5

Order-No.: **LT5-W**

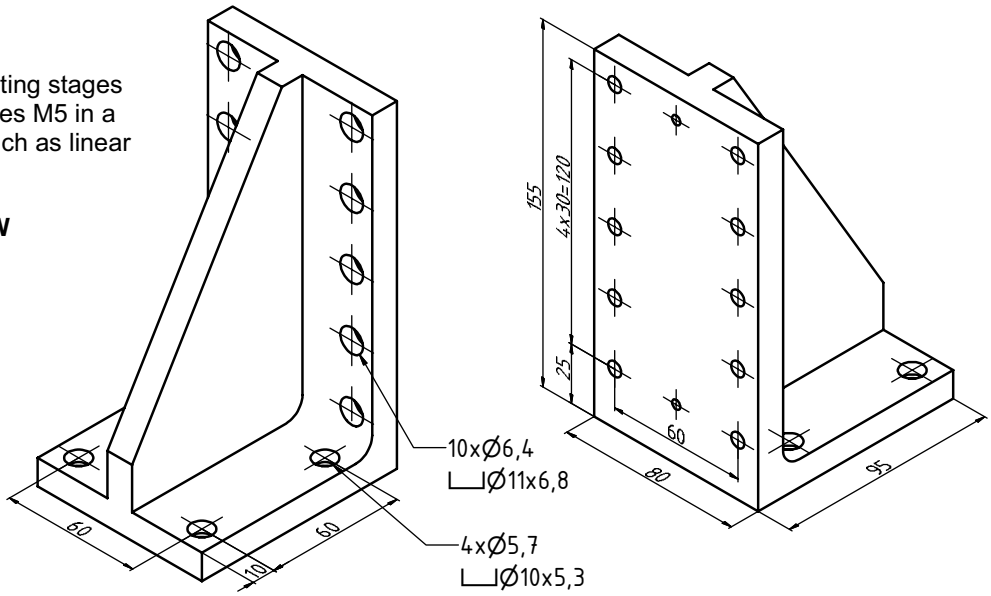

Bracket

suitable for mounting stages PT4, HT4 and RT4 on stages with threaded holes M5 in a grid of 60 mm, such as linear stage LT5

Order-No.: **LT5-W80**

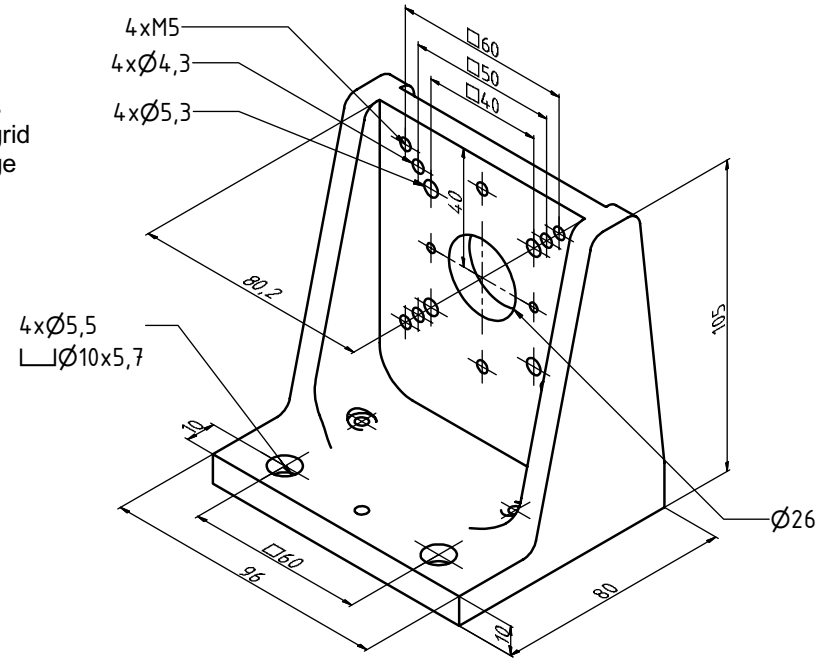

Bracket

suitable for mounting rotary stages RT5 on stages with threaded holes M5 in a grid of 60 mm, such as linear stage LT5

Order-No.: **LT5-RT5W**

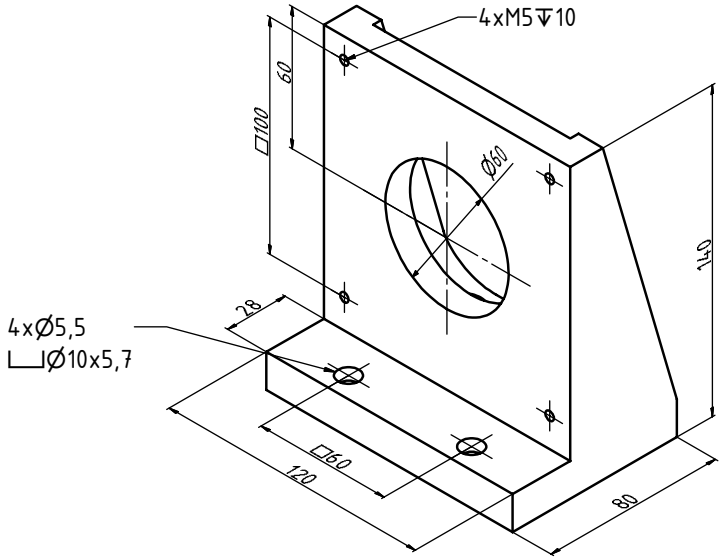

Revision No: 04

Adapter Plate

suitable for mounting stages LT5, RT4, HT4 and PT4 on linear stages LT6

Order-No.: **LT6-LT5**

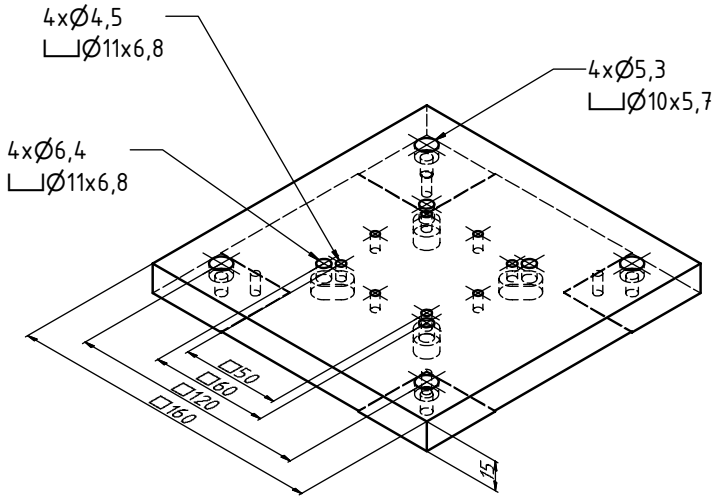

Adapter Plate

suitable for crosswise mounting of linear stages LT6

Order-No.: **LT6-LT6**

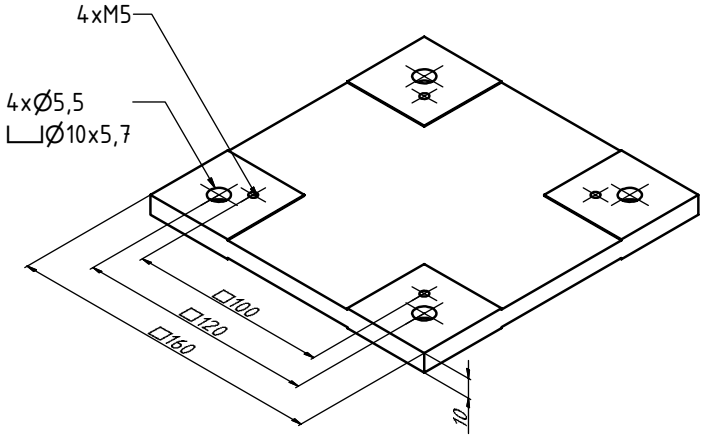

Bracket

suitable for mounting rotary stage RT5 on linear stages LT6

Order-No.: **LT6-RT5W**

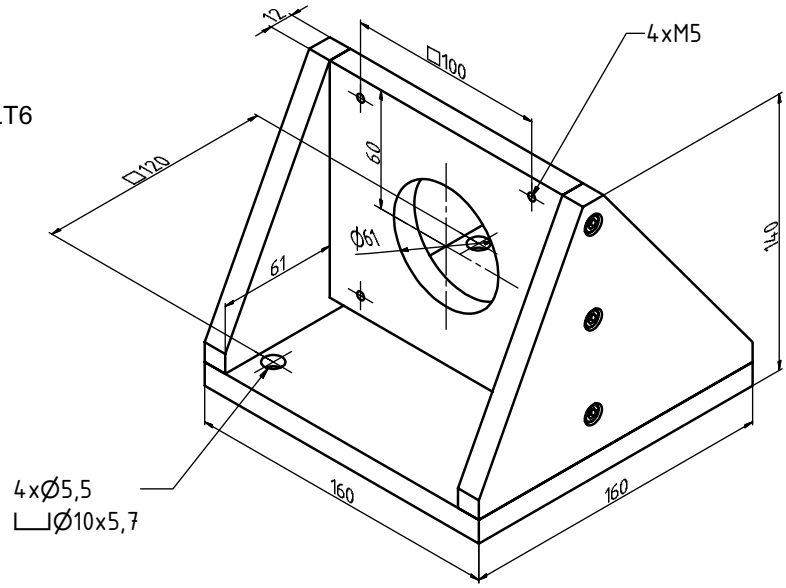

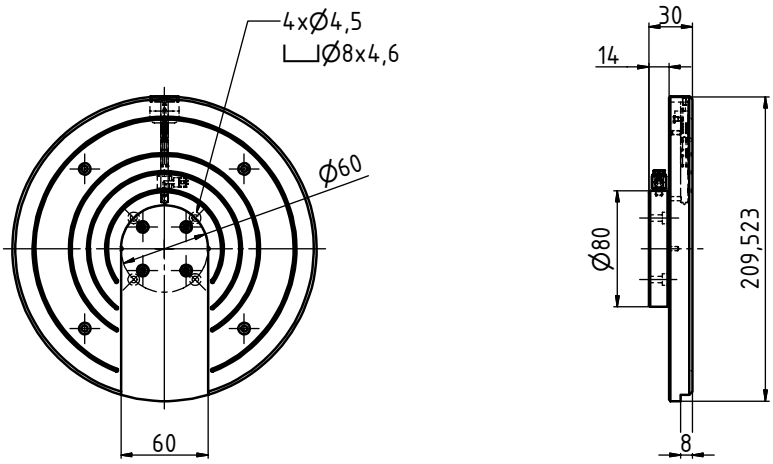

Wafer-Chuck

4", 5", 6" and 8" selectable
surface grinded and hard-anodized
flatness 2 µm
vacuum connection threaded hole M5
mountable on rotary stage RT4

Order-No.:
WC5-8HC

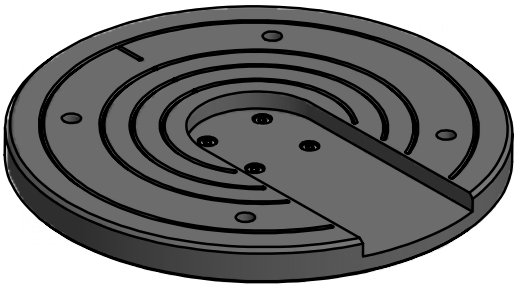

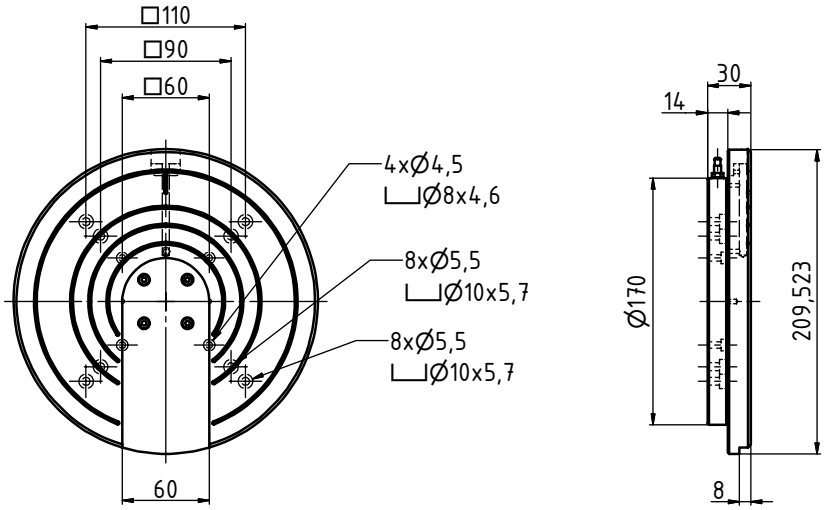

Wafer-Chuck

4", 5", 6" and 8" selectable
surface grinded and hard-anodized
flatness 2 µm
vacuum connection threaded hole M5
mountable on rotary stages RT5, RT6 and RT7

Order-No.:
WC6-8HC

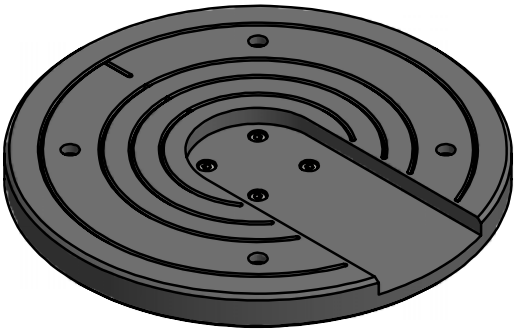

Revision No: 04

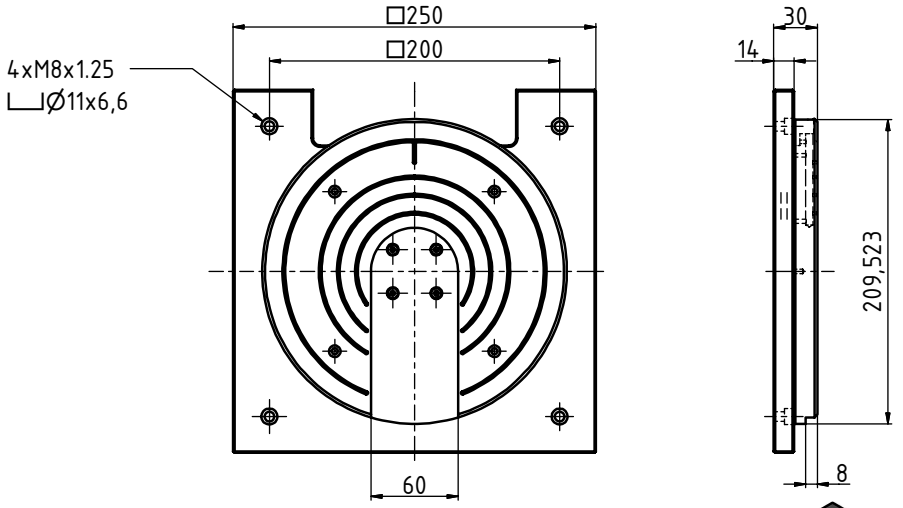

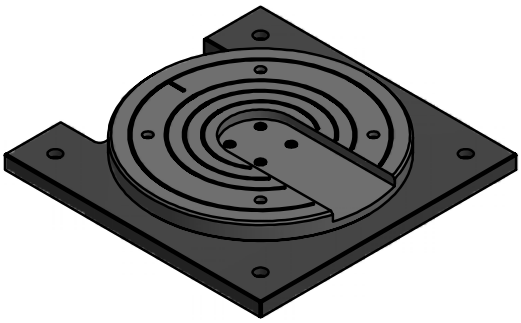

Wafer-Chuck

4", 5", 6" and 8" selectable
surface grinded and hard-anodized
flatness 2 µm
vacuum connection threaded hole M5
mountable on XY stages KT7 and GT8

Order-No.:
WC8-8HC

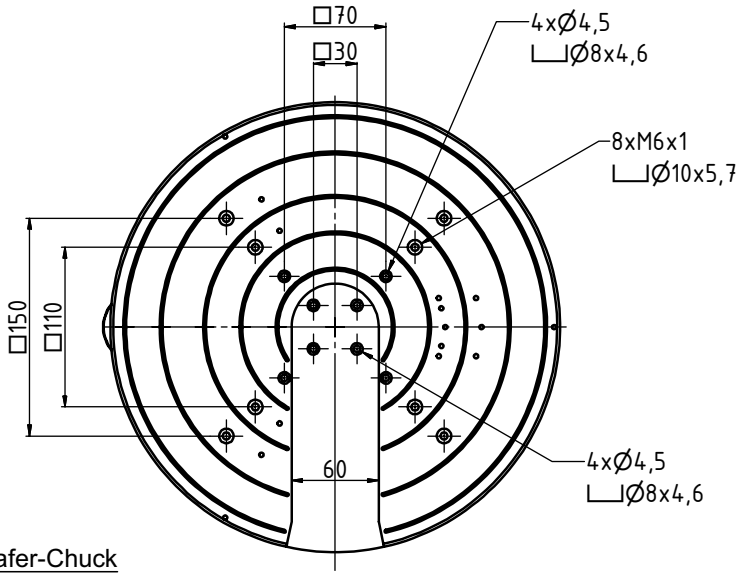

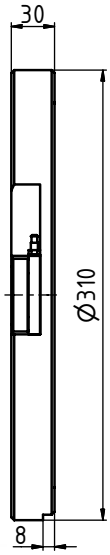

Wafer-Chuck

4", 5", 6", 8", 10 and 12" selectable
surface grinded and hard-anodized
flatness 2 µm
vacuum connection threaded hole M5
mountable on rotary stages RT5 and RT7
as well on XY stages GT8 and GT9

Order-No.:
WC6-12HC

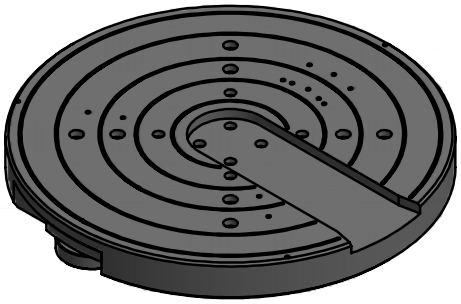

Compact steppermotor controller F9S-3-E

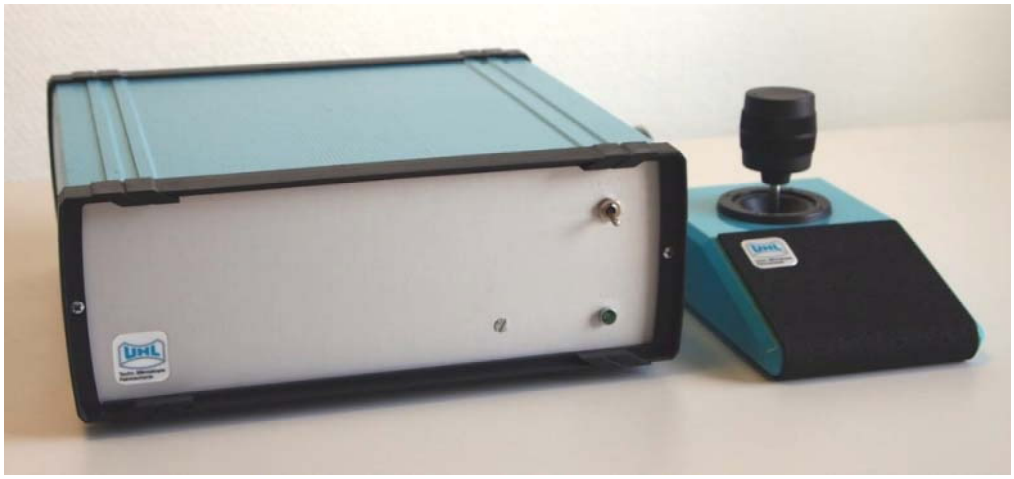

The **F9S-3-E** is a high resolution motion controller for 2-phase stepper motors. It can run up to 3 axis and is suitable for positionings down to 0.1 µm. It is characterized by a very smooth operation of the motors. The controller operates in vector mode, i.e. the target position is approached linearly, with automatically generated and freely adjustable ramps and decreased motor current in the end position. In all modes of operation, limit switches monitor the connected axis.

The **F9S-3-E** can be used as a stand-alone unit via joystick or controlled by a PC via the RS 232 or USB interface. The mode of operation (manual or automatic) is selectable by a toggle switch at the front plate. Copious commands like homing, moving range measurement, absolute position, relative distance, interrupt, joystick on/off etc. are available for the usage with a PC. During joystick controlled mode the current positions can be read via the RS232 or USB interface.

The motion controller is supplied completly with joystick and cable set for the Uhl measuring stages.

Revision No: 04

Technical Data:

- max. motor speed with 200 motor steps:	40 rev. / s
- step resolution with 200 motor steps:	50,000 steps / rev.
- max. motor current:	1.2 A
- max. motor voltage:	24 V
- power supply:	110 -120 V, 200 - 240 V, 50 / 60 Hz, 100VA
- interface:	RS232 (9600-57600 Baud) or USB
- dimensions:	245 x 185 x 91 mm
- weight:	3.5 kg

Options:
- 3 auxillary axis

Closed loop steppermotor controller F9S-3-M

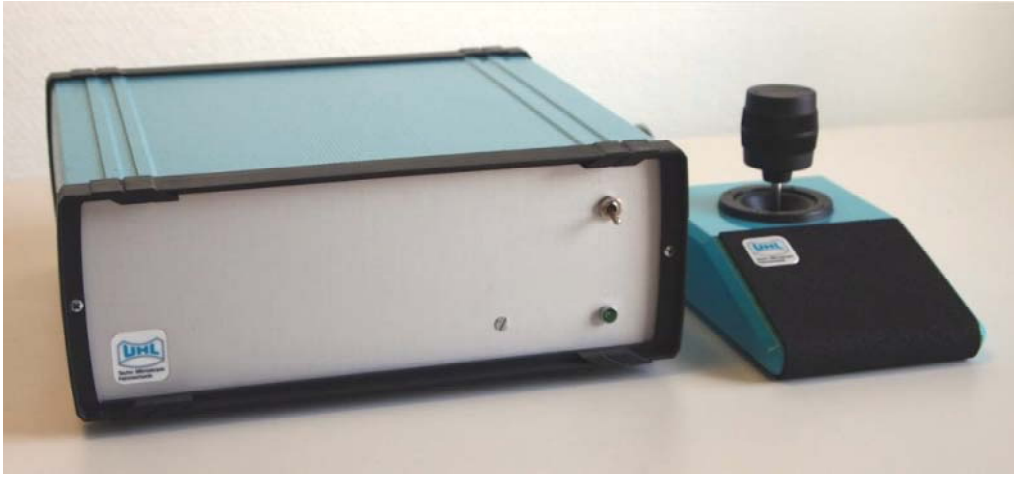

The **F9S-3-M** is a high resolution motion controller for 2-phase stepper motors. It runs up to 3 axis and is suitable for positionings down to 0.1 µm. It is characterized by a very smooth operation of the motor. The controller operates in vector mode, i.e. the target position is approached linearly, with automatically generated and freely adjustable ramps and decreased motor current in the end position. In all modes of operation limit switches monitor the connected axis. Additionally, the controller is capable of processing position data from incremental measuring systems for all axis. The differential voltage signal
(1 Vpp) is analyzed with a 1000-times interpolation. Without measuring systems the controller orientates by the number of motor steps.

The **F9S-3-M** can be used as a stand-alone unit via joystick or controlled by a PC via the RS232 interface. Copious commands like homing, moving range measurement, absolute position, relative distance, interrupt, joystick on/off etc. are available for usage with a PC. During joystick controlled mode the current positions can be read via the RS232 interface. A multi-functional interface enables some special functions like, for example, a trigger signal can be generated to synchronize external equipment like a camera or a Z-measurement sensor. A snapshot input can be used to save current positions during the movement and an emergency-stop can be connected.
The controller is supplied completly with joystick and cable set for the Uhl measuring stages.

Technical Data:

- max. motor speed with 200 motor steps:	40 rev. / s
- step resolution with 200 motor steps:	50,000 steps / rev.
- max. motor current:	2.5 A
- max. motor voltage:	40 V
- power supply:	110 -120 V, 200 - 240 V, 50 / 60 Hz, 100VA
- interface:	9600 - 57600 Baud
- dimensions:	250 x 230 x 100 mm
- weight:	4.5 kg

Options:
- encoder signal TTL
- 19" housing
- two axis
- various motor currents

High power closed loop steppermotor controller F9E-3-M

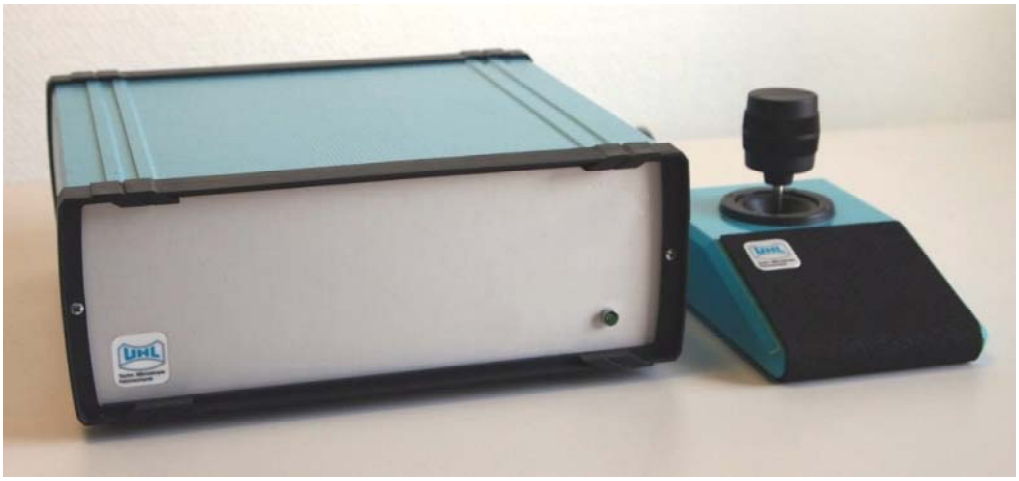

The **F9E-3-M** is a high resolution motion controller for 2-phase stepper motors. It runs up to 3 axis and is suitable for positionings down to 0.1 µm. It is characterized by a very smooth operation of the motor. The controller operates in vector mode, i.e. the target position is approached linearly, with automatically generated and freely adjustable ramps and decreased motor current in the end position. In all modes of operation limit switches monitor the connected axis. Additionally, the controller is capable of processing position data from incremental measuring systems for all axis. The differential voltage signal (1 Vpp) is analyzed with a 8,000-times interpolation. Without measuring systems the controller orientates by the number of motor steps.

The **F9E-3-M** can be used as a stand-alone unit via joystick or controlled by a PC via USB or RS232 interface. Copious commands like homing, moving range measurement, absolute position, relative distance, interrupt, joystick on/off etc. are available for usage with a PC. During joystick controlled mode the current positions can be read via the interface. A multi-functional interface enables some special functions like, for example, a trigger signal can be generated to synchronize external equipment like a camera or a Z-measurement sensor. A snapshot input can be used to save current positions during the movement and an emergency-stop can be connected.
The controller is supplied completly with joystick and cable set for the Uhl measuring stages.

Revision No: 04

Technical Data:

- max. motor speed with 200 motor steps:	70 rev. / s
- step resolution with 200 motor steps:	1.638.400 steps / rev.
- max. motor current:	5 A (4. axis max. 10 A)
- max. motor voltage:	48 V
- power supply:	90 - 264 V, 50 / 60 Hz, 100VA
- interface:	USB and RS232 (up to 921.600 Kbd)
- dimensions:	270 x 230 x 100 mm
- weight:	3,4 kg

Options:
- encoder signal TTL
- 19" housing
- fourth axis
- various motor currents

High power closed loop servomotor controller F9L-3-M

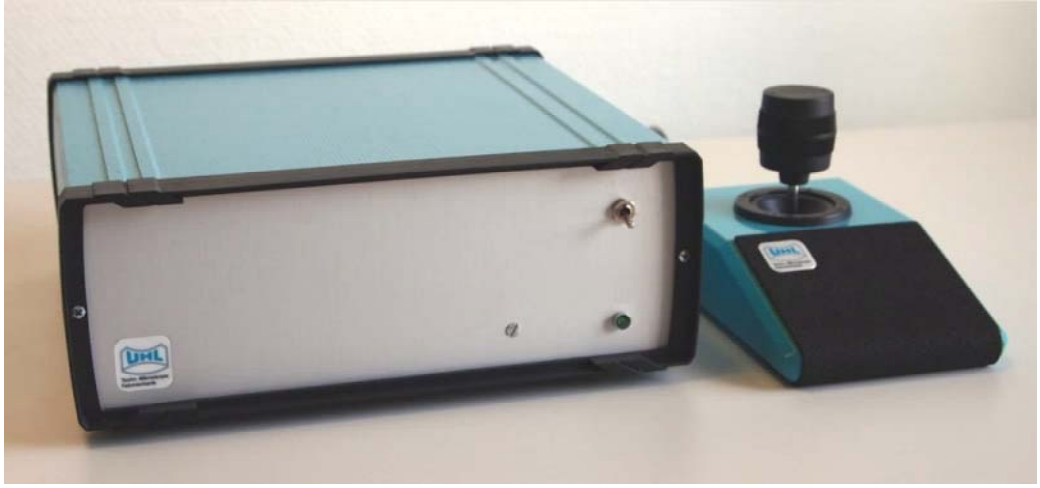

The **F9L-3-M** is a new compact servo controller for highest dynamic and precision. It can control alternatively 2 or 3 phase synchron servo motors (linear / rotating) in X/Y and works in the capacity range of 48V and max. 10A. The Z axis is configured for stepper motors. The **F9L-3-M** allows very quick positioning operations with highest precision.

It is characterized by a very smooth operation of the motor. The controller operates in vector mode, i.e. the target position is approached linearly, with automatically generated and freely adjustable ramps and decreased motor current in the end position. In all modes of operation limit switches monitor the connected axis. Additionally, the controller is capable of processing position data from incremental measuring systems for all axis. The differential voltage signal (1 Vpp) is analyzed with a 8,000-times interpolation. Without measuring systems the controller orientates by the number of motor steps.

The **F9L-3-M** can be used as a stand-alone unit via joystick or controlled by a PC via USB or RS232 interface. Copious commands like homing, moving range measurement, absolute position, relative distance, interrupt, joystick on/off etc. are available for usage with a PC. During joystick controlled mode the current positions can be read via the interface. A multi-functional interface enables some special functions like, for example, a trigger signal can be generated to synchronize external equipment like a camera or a Z-measurement sensor. A snapshot input can be used to save current positions during the movement and an emergency-stop can be connected.
The controller is supplied completly with joystick and cable set for the Uhl measuring stages.

Technical Data:

- max. motor current:	5 A (4. axis max. 10 A)
- max. motor voltage:	48 V
- encoder signal:	1 Vss with 8.000x interpolation
- interface:	USB and RS232, 9.600 up to 921.600 Baud
- power supply:	90 - 264 V 50 / 60 Hz, 100VA
- dimensions:	270 x 230 x 100 mm
- weight:	3.4 kg

Options:
- encoder signal TTL
- 19" housing
- fourth axis
- various motor currents

Wiring Diagram Stepper Motor

Specification 2-Phase Stepper Motors			
Type:	ZSS33	ZSS43	RSS65
Nominal current / phase [A]:	1.2	2.5	2.5
Holding torque [mNm]:	75	260	950
Steps:	200	200	200

15-pin sub-D connector (male)

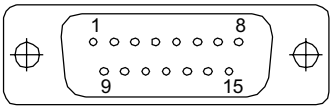

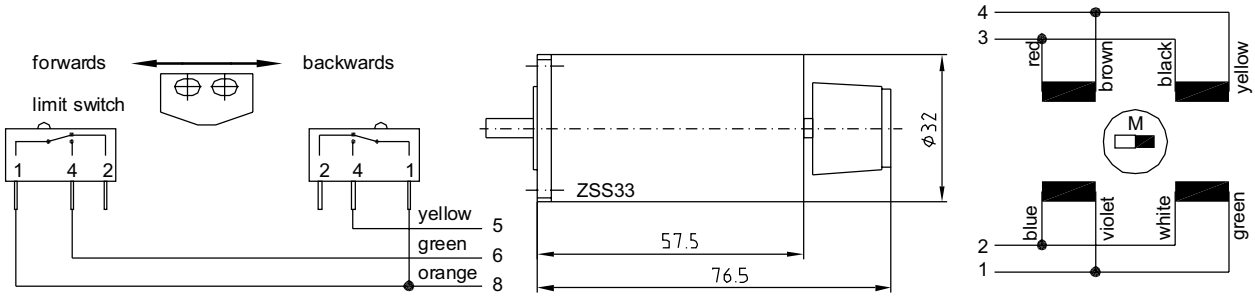

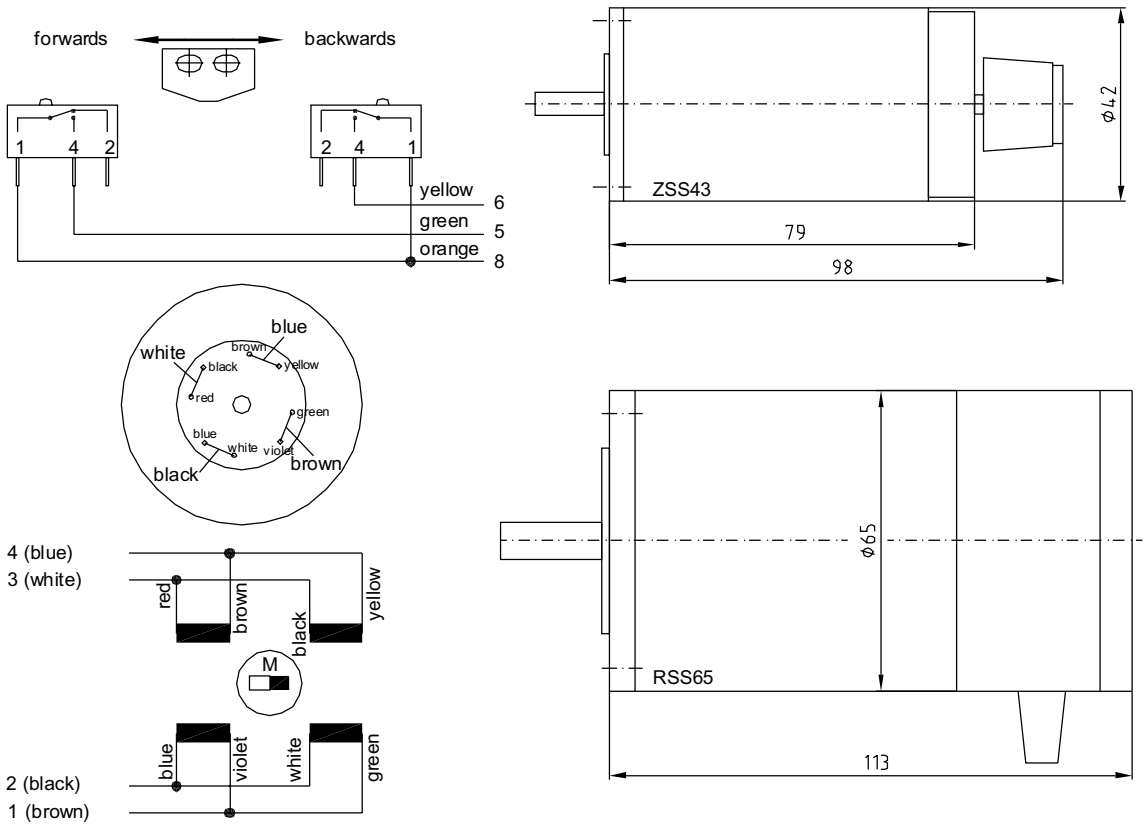

Revision No: 04

Wiring Diagram DC-Motors

Specification DC-Motors		
Type:	RE 25	RE 35
Assigned power rating [W]:	10 / 20	90
Nominal voltage [V]:	24	42
Stall torque [mNm]:	136 / 240	1070
Starting current [A]:	3.1 / 10.3	20.3
Nominal current [A]:	0.662 / 1.23	2,15

Encoder HEDL 5560 with Line Driver	
Supply voltage:	5 V ± 10%
Output signal:	EIA Standard RS 422
Counts per turn:	1000 (no Index)
Current per channel:	min. -1 mA, max. 5 mA
Max. operating frequency:	100 kHz
Pin assignment:	
Channel $\bar{A}$:	9
Channel A:	3
Channel $\bar{B}$:	13
Channell B:	4
V_{cc} :	10
Ground:	11/12
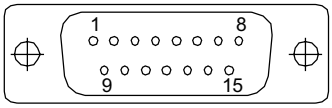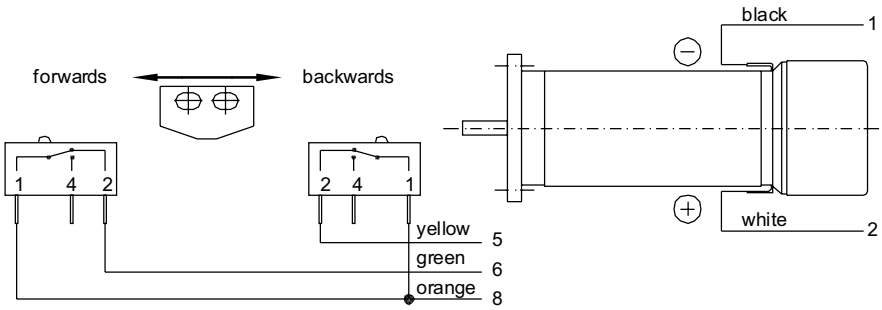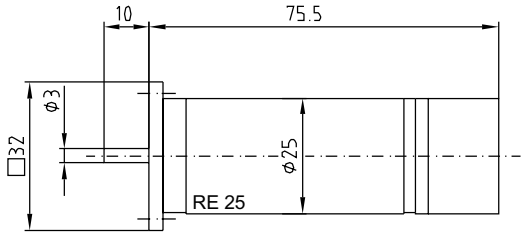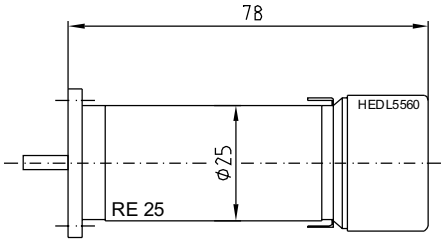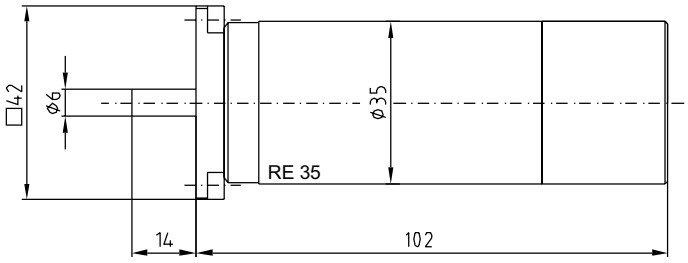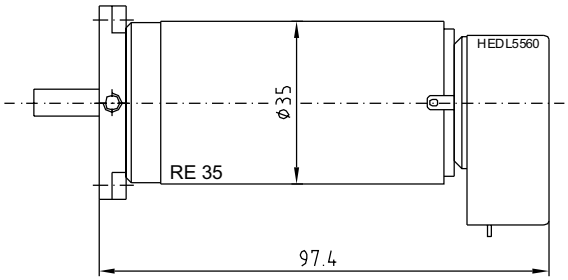
15-pin sub-D connector (male)